YTH223 T, 96041019600, 2010-11

SPARE PARTS LIST

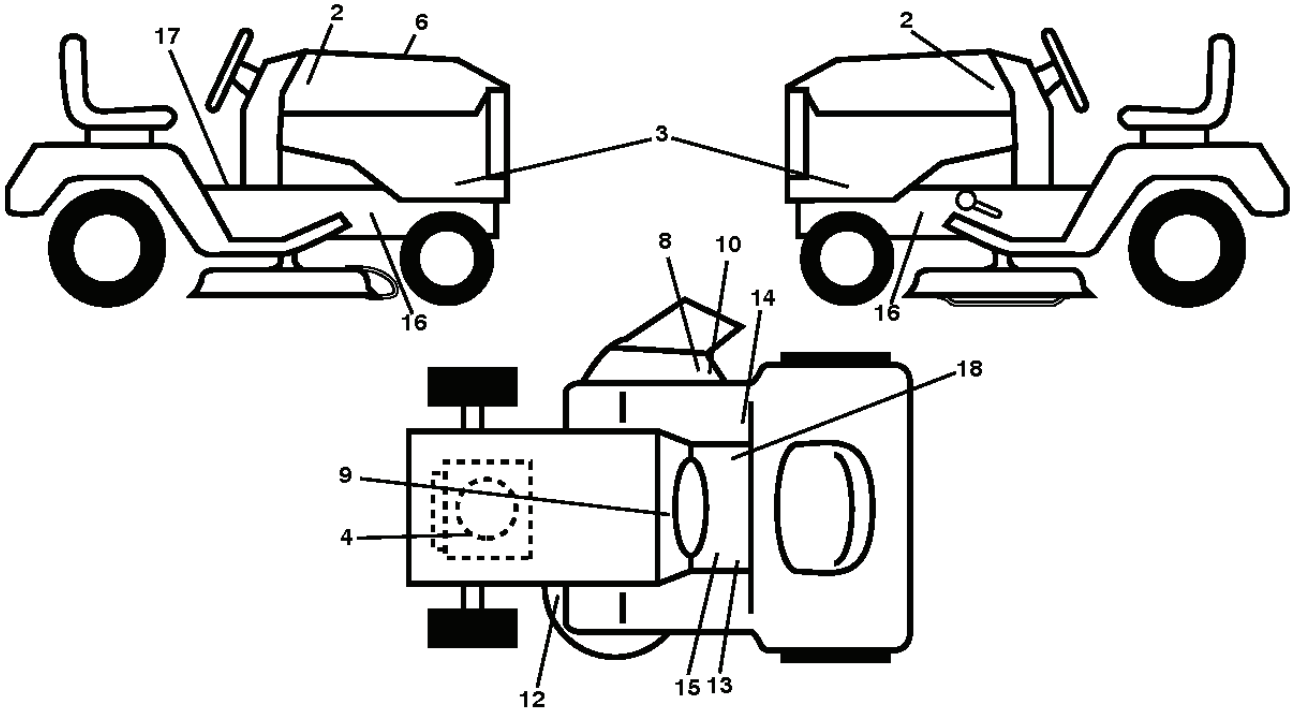
2
6
17
3
2
16
16
8
10
14
18
9
4
12
15
13

REF.	PART NO.	DESCRIPTION	REMARK	QTY.	KIT
2	581627301	DECAL		1	
3	532440857	DECAL		1	
4	532196841	DECAL		1	
6	532439428	DECAL		1	
8	532182166	DECAL		1	
9	532145005	DECAL		1	
10	532196357	DECALC."DANGER DEFLECTEUR"		1	
12	532160396	DECAL		1	
13	532400389	LABEL		1	
14	532180432	DECAL		1	
15	532159737	DECAL		1	
16	532159736	DECAL		1	
17	532140837	DECAL		1	
18	532178302	DECAL		1	
--	532162598	DECAL		1	
--	532166960	DECAL		1	
--	532401771	FOOTREST	LH	1	
--	532403773	FOOTREST	RH	1	

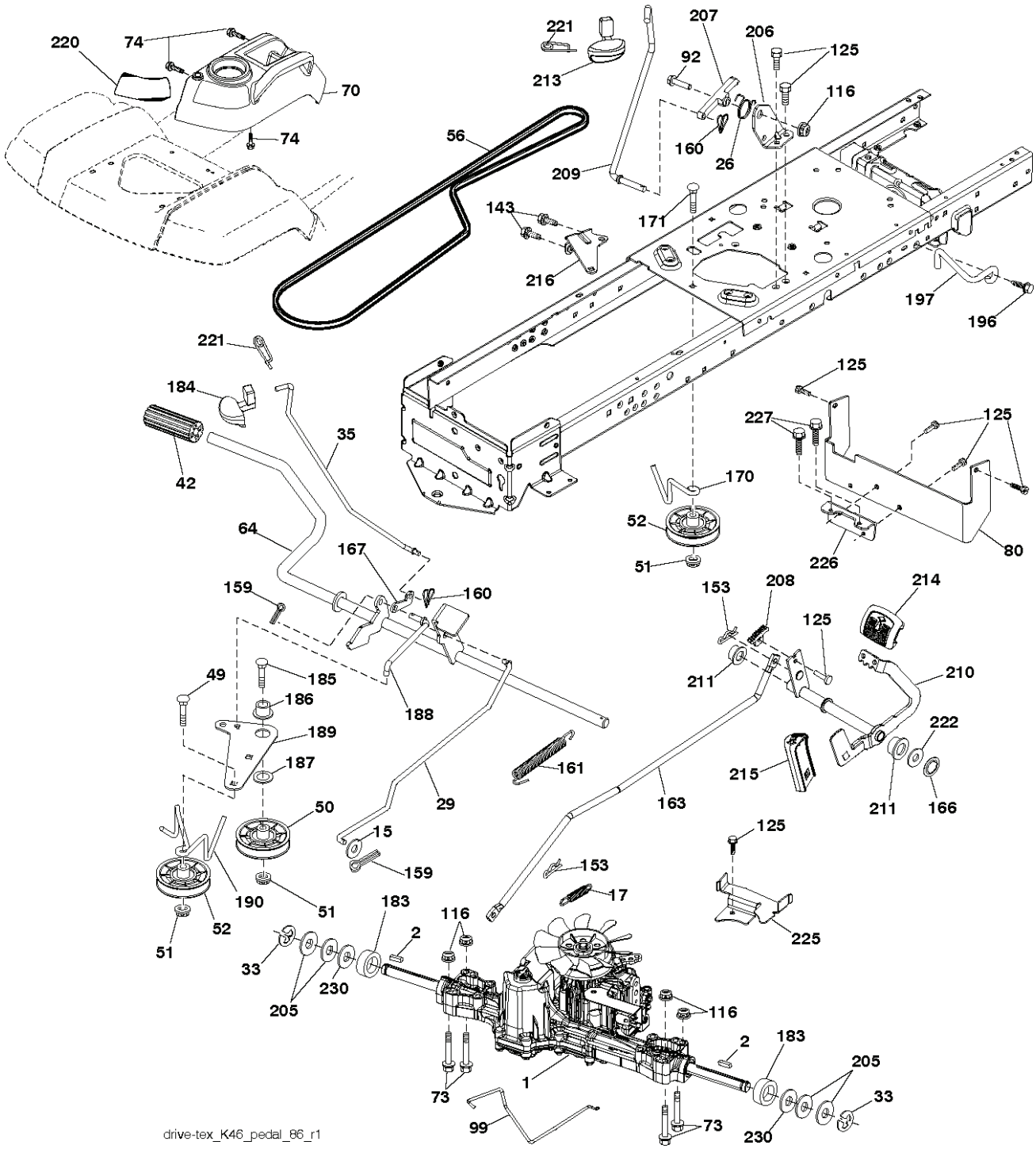
220
74
70
74
221
213
207
206
125
92
116
160
26
56
209
143
171
216
197
196
221
184
35
42
125
227
125
170
52
51
226
80
64
167
160
159
153
208
214
125
211
210
49
185
186
188
189
187
161
222
215
29
163
211
166
50
15
159
125
153
17
190
51
52
51
183
116
2
225
33
230
205
116
2
183
205
1
73
33
99
73
230
drive-tex_K46_pedal_86_r1

REF.	PART NO.	DESCRIPTION	REMARK	QTY.	KIT
1	000000000	W/O DESCRIPTION	Transaxle, Tufftorq K46BT (426120)	1	
2	532123583	KEY		1	
15	819131316	WASHER		1	
17	532413678	SRPING.BRAKE.K46.GREEN*SUBS/2*		1	
26	532199679	SPRING		1	
29	532403806	ROD		1	
33	812000001	RETAINER RING		1	
35	583864501	ROD		1	
42	532124872	PEDAL RUBBER		1	
49	872110614	BOLT		1	
50	532194327	PULLEY		1	
51	873900600	NUT		1	
52	532194326	PULLEY		1	
56	532130969	BELT		1	
64	532197865	SHAFT		1	
70	532400530	PANEL		1	
73	874490540	BOLT		1	
74	532142432	SCREW		1	
80	532410024	STRAP TORQUE		1	
92	874760520	BOLT		1	
99	532415742	ROD		1	
116	873900500	NUT		1	
125	817000512	SCREW		1	
143	817490508	SCREW		1	
153	532124788	RETAINER RING		1	
159	876020412	SPLIT PIN		1	
160	532169484	PIN		1	
161	532105709	SPRING		1	
163	532448275	CONTROL		1	
166	532429164	NUT		1	
167	532405257	LATCH		1	
170	532194322	KEEPER		1	
171	872110616	BOLT		1	
183	532137057	SPACER		1	
184	532403118	CONTROL		1	
185	872110622	BOLT		1	
186	532194321	SPACER		1	
187	819133210	WASHER		1	
188	532194323	LINK		1	
189	532194317	PLATE		1	
190	532194318	BELT GUIDE		1	
196	817000616	SCREW		1	
197	532195804	BRACKET		1	
205	532121748	WASHER		1	
206	532197867	BRACKET		1	
207	532197868	LATCH		1	
208	532197869	SUPPORT		1	
209	532199592	ROD		1	
210	532197860	ARM		1	
211	532120183	BEARING		1	
213	532403119	CONTROL		1	
214	532421263	PAD		1	
215	532401723	PEDAL		1	
216	532196131	BRACKET		1	
220	532198908	LENS		1	
221	532403187	SPRING		1	
222	879212010	WASHER		1	
225	532403319	BELT GUIDE		1	
226	532401564	BRACKET		1	
227	817490512	SCREW		1	
230	532188967	WASHER		1	

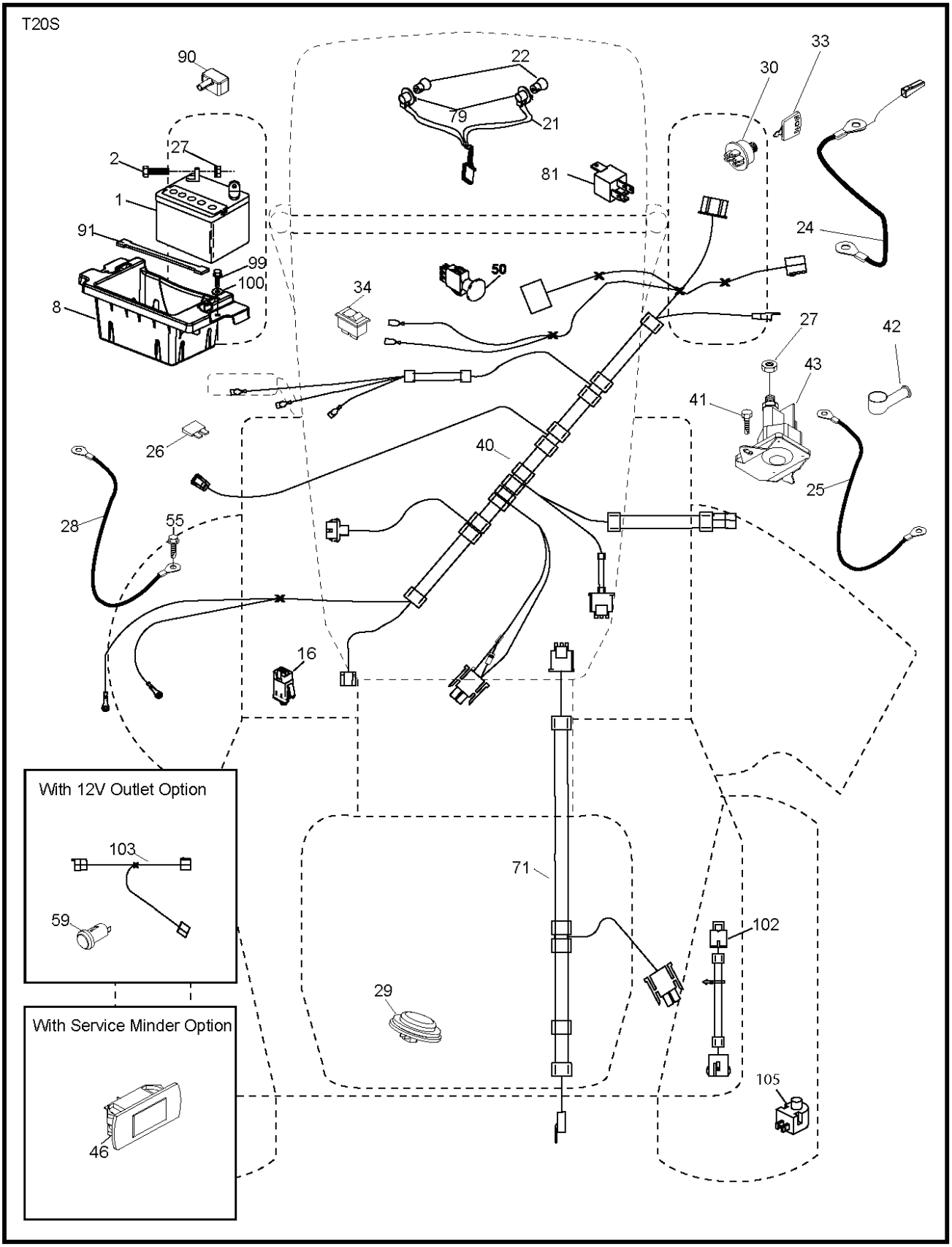
T20S
90
22
33
30
79
21
27
2
81
1
91
24
99
50
100
34
8
27
42
43
41
26
40
25
28
55
16
With 12V Outlet Option
103
59
71
102
29
With Service Minder Option
105
46

REF.	PART NO.	DESCRIPTION	REMARK	QTY.	KIT
1	532163465	BATTERY		1	
2	874760412	BOLT		1	
8	532186491	BOX		1	
16	532176138	MICRO SWITCH		1	
21	532400252	HARNESS		1	
22	532004152	BULB		1	
24	532400253	CABLE		1	
25	532412895	CABLE.STARTER.6G.BL/RE*SUBS/2*		1	
26	532175158	FUSE		1	
27	873510400	NUT		1	
28	532145491	CABLE		1	
29	532401545	SWITCH		1	
30	532193350	IGNITION MODULE		1	
33	532411935	KEY		1	
34	532110712	SWITCH		1	
40	532409614	CABLE		1	
41	817720408	SCREW		1	
42	532131563	COVER		1	
43	532192507	SOLENOID		1	
46	532401763	DISPLAY		1	
50	532174651	SWITCH		1	
55	817060512	SCREW		1	
71	532194276	CABLE ASSY		1	
79	532175242	HOLDER		1	
81	532409615	HARNESS		1	
90	532435395	TERMINAL COVER		1	
91	532190270	STRAP BATTERY MOUNT FRO		1	
99	817670412	SCREW		1	
100	819091416	WASHER		1	
102	532404454	CABLE		1	
105	532407568	SWITCH		1	

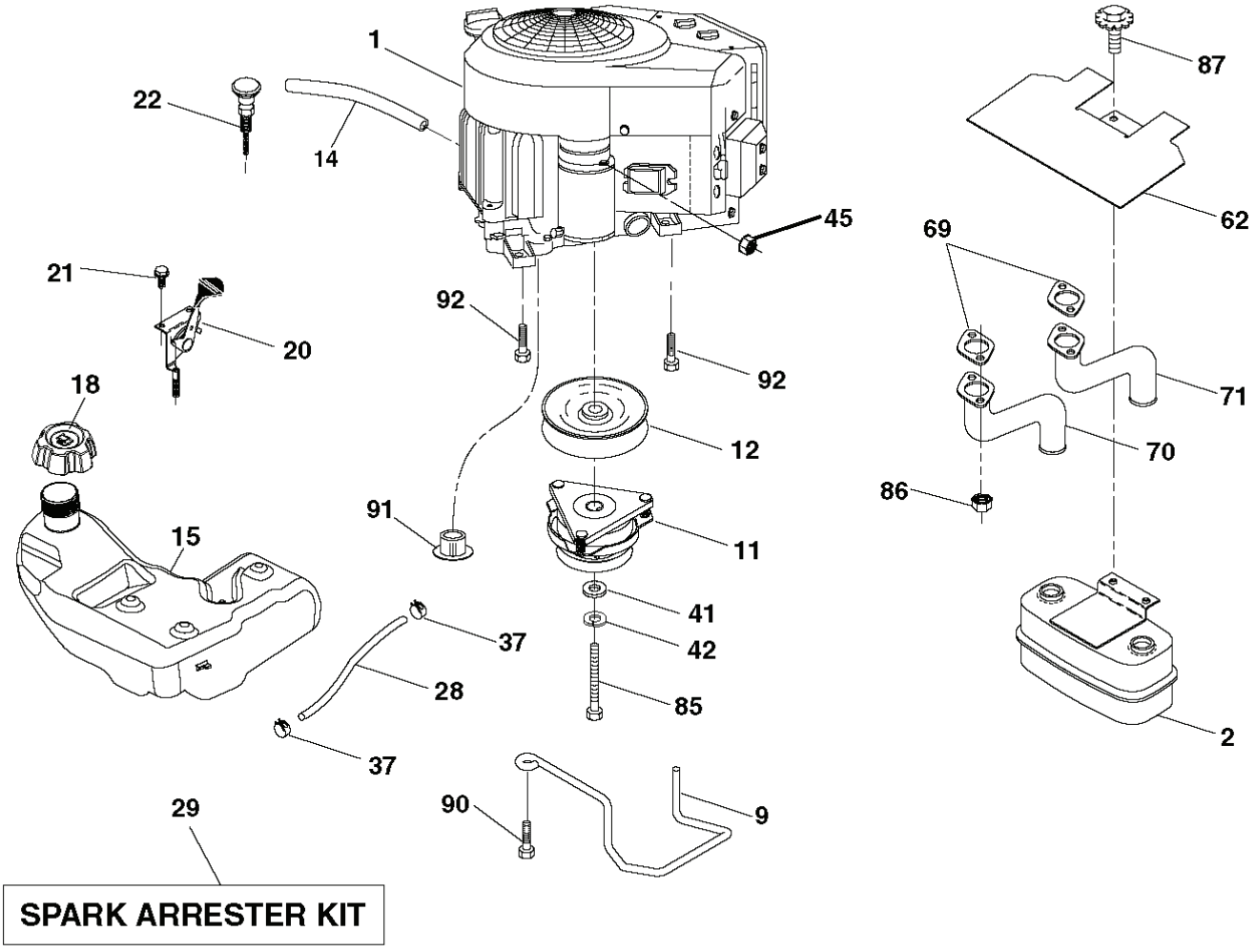

engine-tex_Kawa-2cyl_7

REF.	PART NO.	DESCRIPTION	REMARK	QTY.	KIT
1	000000000	W/O DESCRIPTION	KAWA ENGINE MODEL FS651V-AS50	1	
2	532149723	MUFFLER		1	
9	532194320	BELT GUIDE		1	
11	532400008	CLUTCH		1	
12	532405097	PULLEY		1	
14	532148456	TUBE		1	
15	532193499	FUEL TANK		1	
18	532430217	HUB CAP		1	
20	532178385	THROTTLE TRIGGER		1	
21	532416358	SCREW		1	
22	532191596	COMMA*RPL.PAR 532187767428		1	
28	532142158	FULE LINE		1	
29	532137180	SPARK ARRESTER KIT		1	
37	532123487	HOSE CLAMP		1	
41	532126197	WASHER		1	
42	810040700	WASHER		1	
45	873510400	NUT		1	
62	532434017	SHIELD		1	
69	532178151	MUFFLER GASKET		1	
70	532424765	EXHAUST	LH	1	
71	532424766	EXHAUST	RH	1	
85	532173937	BOLT		1	
86	532184362	NUT		1	
87	532198239	BOLT		1	
90	817000616	SCREW		1	
91	532187495	BUSHING		1	
92	817120616	SCREW		1	

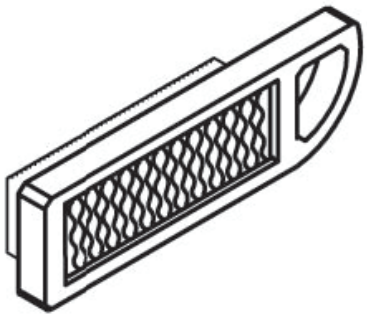

11013-7049

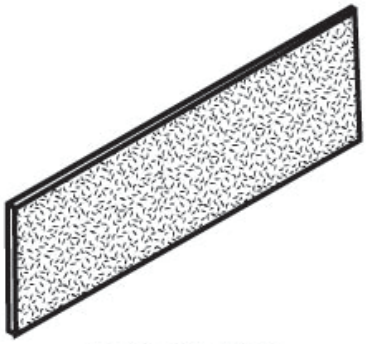

11013-7046

BPR4ES

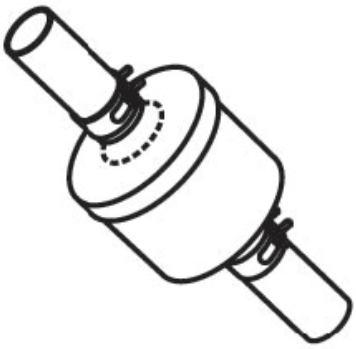

49019-7005

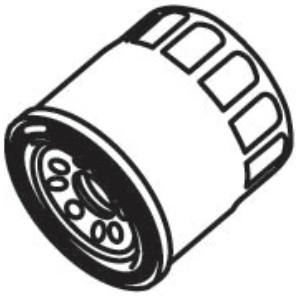

49065-7007

532 13 09-69

532 40 51-43

532 40 53-80

439428

REF.	PART NO.	DESCRIPTION	REMARK	QTY.	KIT
110137049	110137049	TBD		1	
110137046	581991001	AIR FILTER		1	
BPR4ES	535414464	SPARK PLUG		1	
490197005	490197005	TBD		1	
490657007	578159201	OIL FILTER		1	
532130969	532130969	BELT		1	
532405143	532405143	BELT		1	
532405380	532405380	RIDE ON BLADE		1	

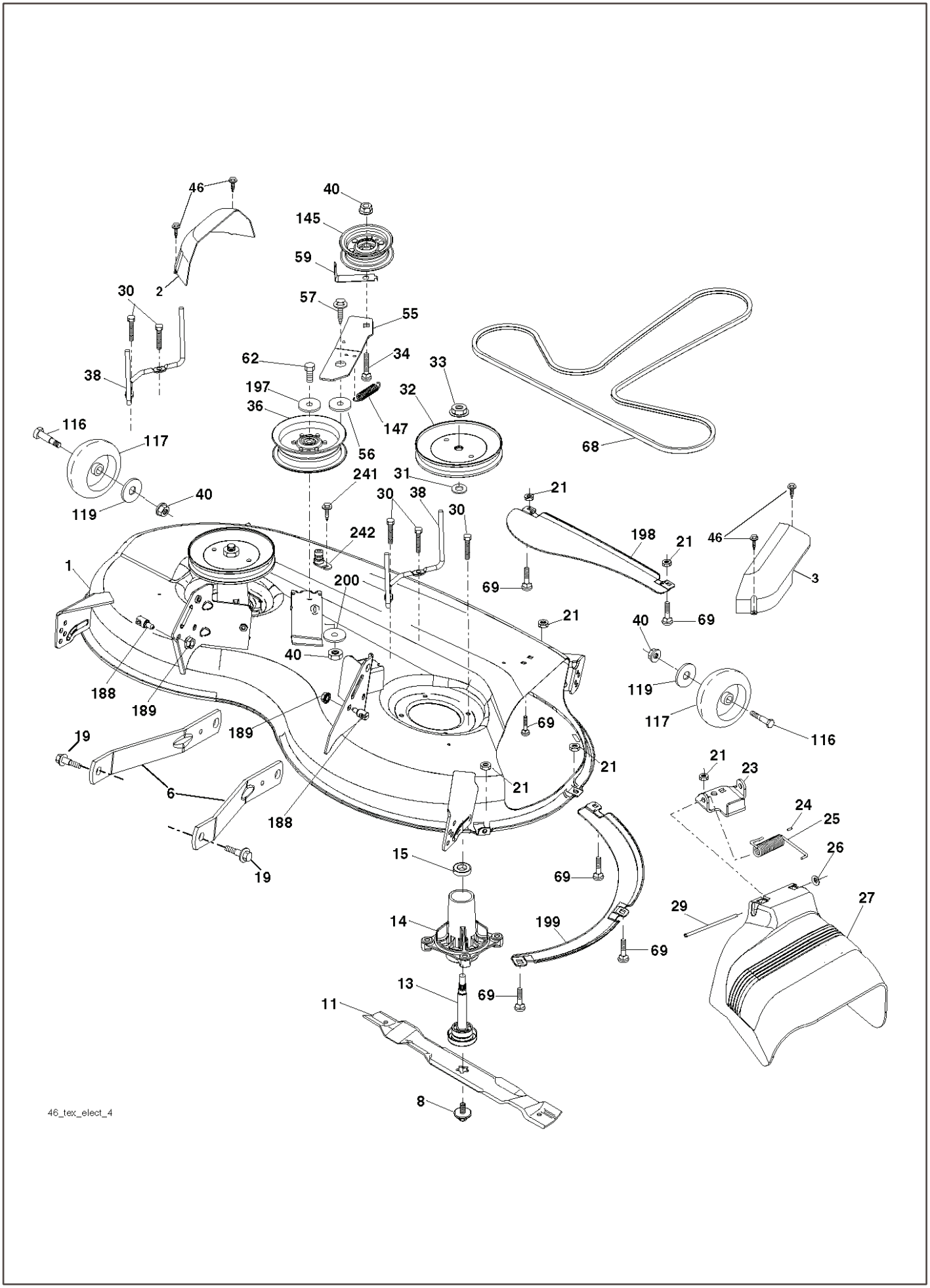
46
40
145
59
2
30
57
55
62
34
33
38
197
32
36
147
116
117
56
68
241
31
40
30
38
30
21
119
242
198
21
46
1
200
69
3
21
40
69
40
188
189
119
117
116
189
69
19
21
21
23
6
21
24
25
188
26
15
69
19
29
27
14
199
69
13
69
11
8
46_tex_elect_4

REF.	PART NO.	DESCRIPTION	REMARK	QTY.	KIT
1	532442372	CUTTING DECK		1	
2	532405506	COVER		1	
3	532405507	COVER		1	
6	532195186	ARM		1	
8	532193003	SCREW		1	
11	532405380	RIDE ON BLADE		1	
13	532192872	SHAFT ASSY		1	
14	532187281	BEARING HOUSING		1	
15	532110485	BEARING		1	
19	532196539	BOLT		1	
21	873680500	NUT		1	
23	532192557	HINGE		1	
24	532105304	HUB CAP		1	
25	532197026	TORSION SPRING		1	
26	532110452	NUT		1	
27	532405357	DEFLECTOR		1	
29	532131491	SHAFT		1	
30	532173984	SCREW		1	
31	532187690	WASHER		1	
32	532197473	PULLEY		1	
33	532400234	NUT		1	
34	872110612	BOLT		1	
36	532197379	PULLEY		1	
38	532199189	BELT GUIDE		1	
40	873900600	NUT		1	
46	532137729	SCREW		1	
55	532197249	ARM		1	
56	532199092	SPACER		1	
57	817000616	SCREW		1	
59	532141043	GUARD		1	94
62	874520636	BOLT		1	
68	532405143	BELT		1	
69	872140505	BOLT		1	
116	532193406	BOLT		1	
117	532174873	WHEEL		1	
119	819132012	WASHER		1	
145	532193197	PULLEY		1	
147	532197251	SPRING		1	
188	532195161	STUD		1	
189	873900500	NUT		1	
197	819131312	WASHER		1	
198	532403149	PLATE		1	
199	532403150	PLATE		1	
200	532413524	WASHER		1	
241	532152927	SCREW		1	
242	532415598	HOSE COUPLING		1	
--	532192870	SPINDLE	"INCL HOUSING, SHAFT ASSEMBLY, BEARING ONLY"	1	
--	532408354	CUTTING DECK		1	

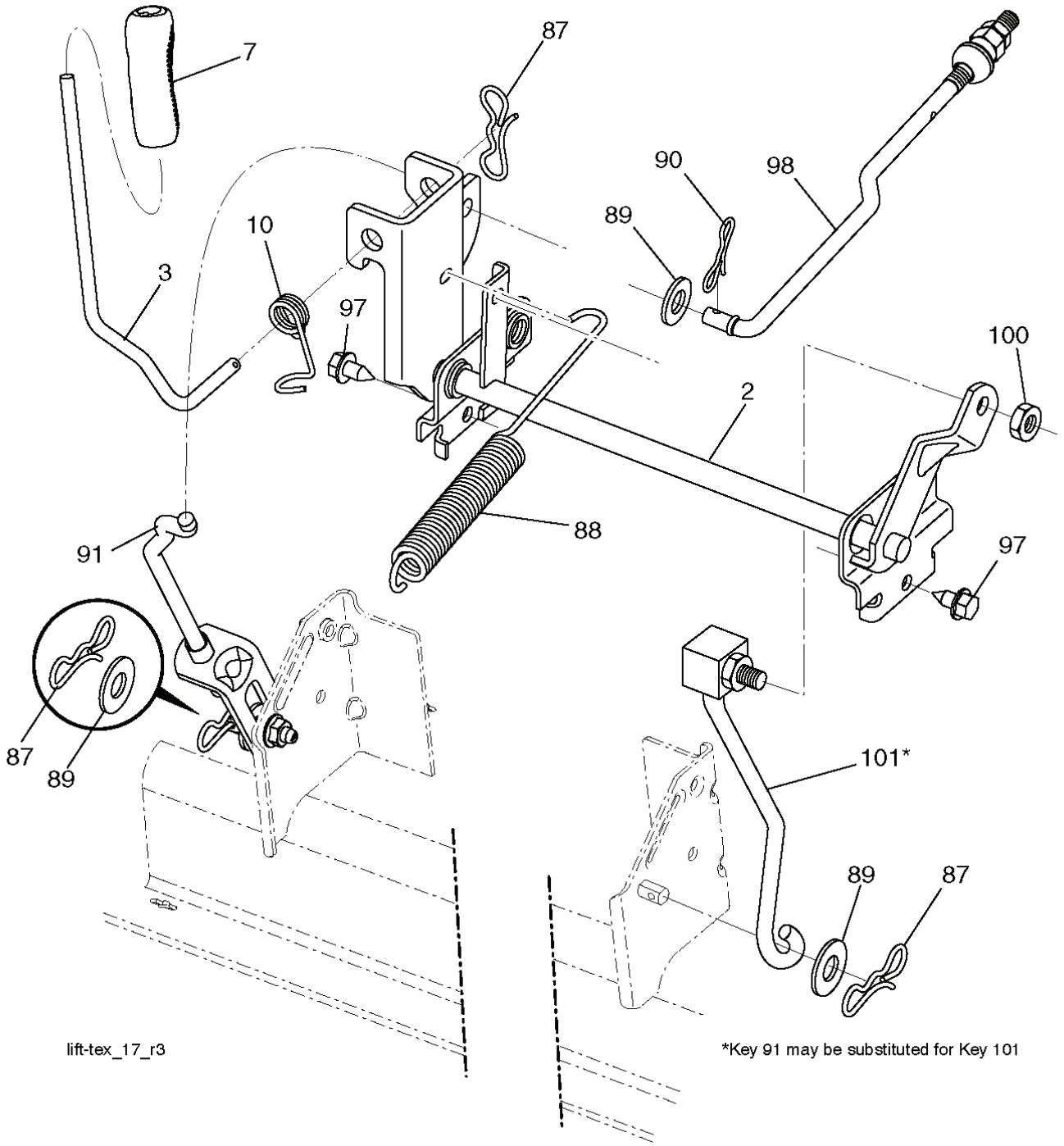
7
87
90
98
89
10
3
97
100
2
88
91
97
87
89
101*
89
87
lift-tex_17_r3
*Key 91 may be substituted for Key 101

REF.	PART NO.	DESCRIPTION	REMARK	QTY.	KIT
2	532422027	SHAFT		1	
3	532195230	LEVER		1	
7	532411555	GRIP		1	
10	532196314	SPRING		1	
87	532194209	SPRING		1	
88	532410710	SPRING		1	
89	819191912	WASHER		1	
90	532194208	PIN		1	
91	532195181	LINK		1	
97	817000612	SCREW		1	
98	532195270	LINK		1	
100	873930600	NUT		1	
101	532407003	LINK		1	

SCH13

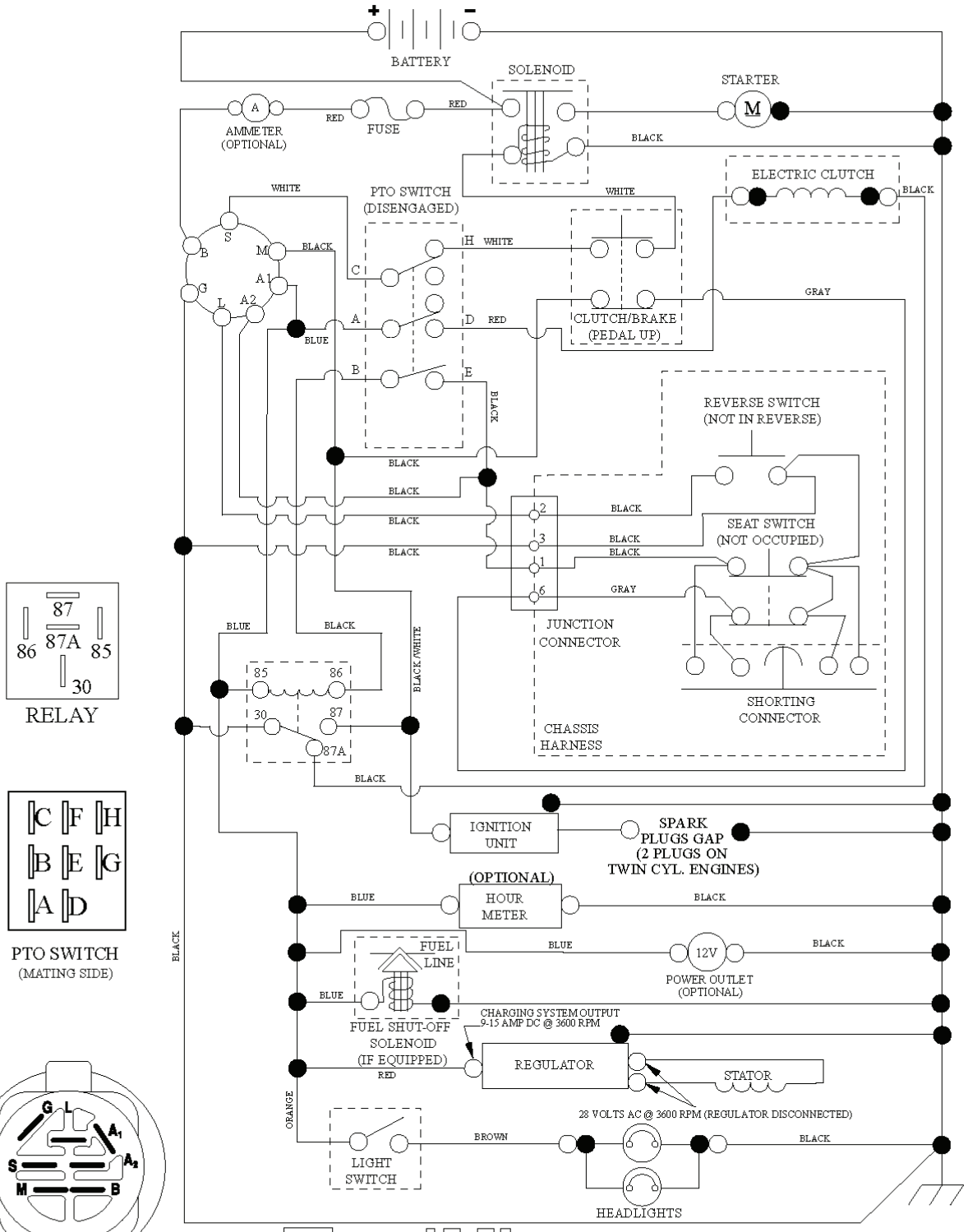

POSITION	CIRCUIT "MAKE"
OFF	M+G+A1
RUN/OVERRIDE	B+A1
RUN	B+A1 L+A2
START	B + S + A1

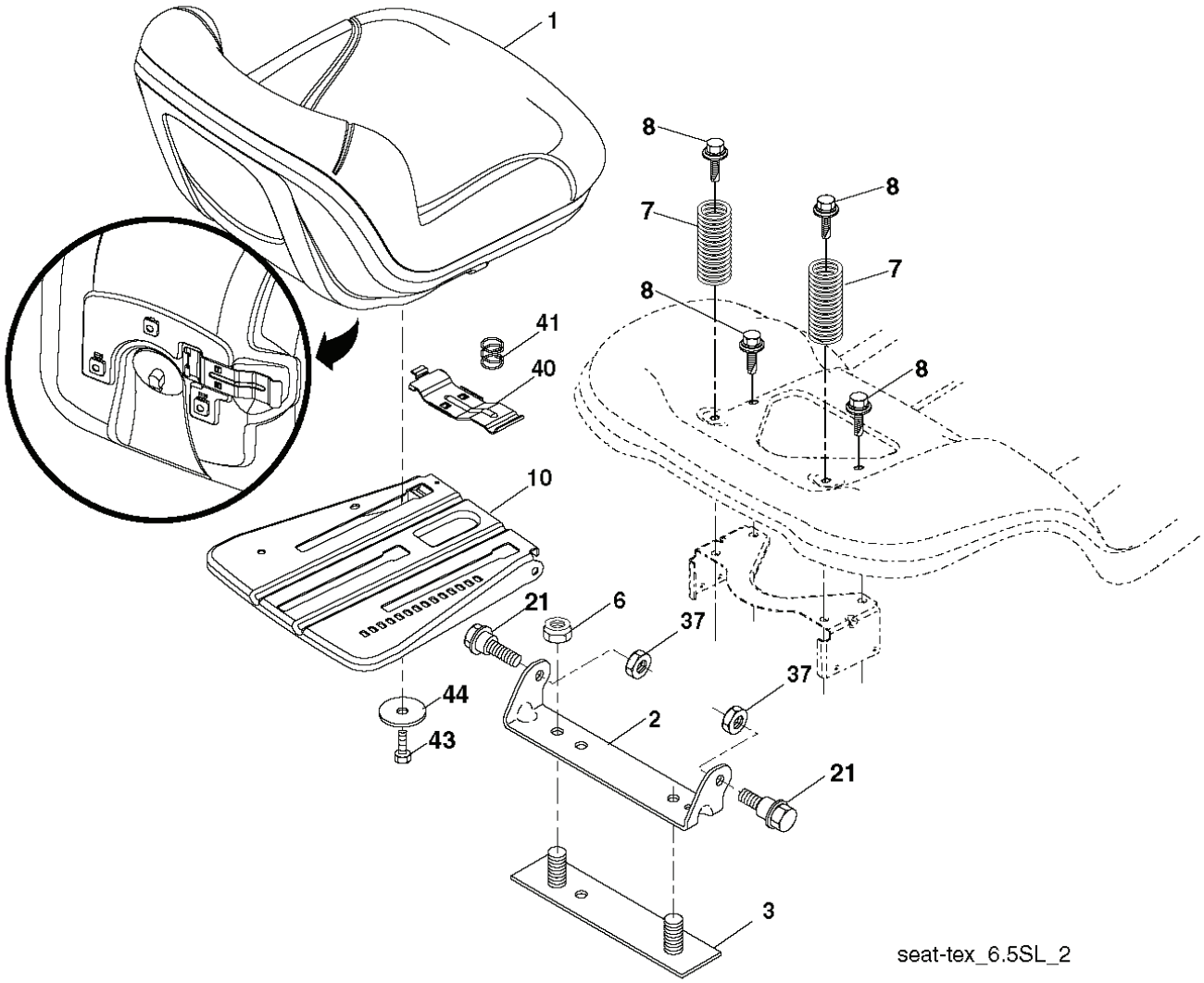
1
8
7
8
7
8
8
41
40
10
21
6
37
37
44
43
2
21
3
seat-tex_6.5SL_2

REF.	PART NO.	DESCRIPTION	REMARK	QTY.	KIT
1	532424071	SEAT		1	
2	532180166	BRACKET		1	
3	532140675	STRAP		1	
6	873800600	NUT		1	
7	532124181	SPRING		1	
8	532171877	BOLT		1	
10	532196977	PLATE		1	
21	532171852	BOLT		1	
37	873800500	LOCK NUT		1	
40	532197661	HANDLE		1	
41	532198200	SPRING		1	
43	874760612	BOLT		1	
44	819133812	WASHER		1	

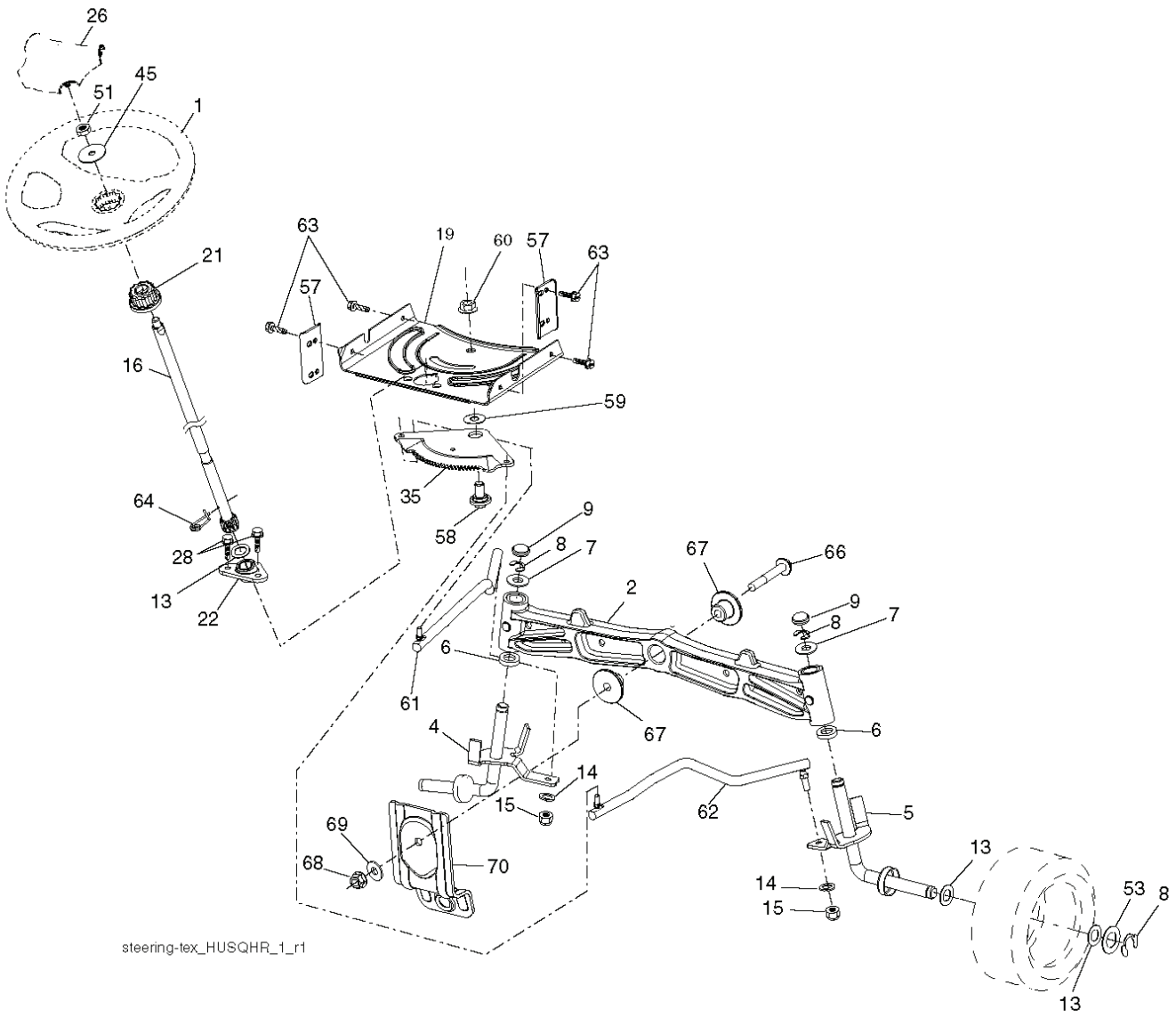
26
45
51
1
21
63
19
60
57
63
57
16
59
35
64
58
9
8
7
67
66
28
2
13
22
9
8
7
6
61
67
6
4
14
15
62
5
69
68
70
13
14
15
53
8
13
steering-tex_HUSQHR_1_r1

REF.	PART NO.	DESCRIPTION	REMARK	QTY.	KIT
1	532416480	STEERING WHEEL		1	
2	532195968	SHAFT		1	
4	532403087	SPINDLE	LH	1	
5	532403088	SPINDLE	RH	1	
6	532124931	WASHER		1	
7	532121748	WASHER		1	
8	812000029	RETAINER RING		1	
9	532121232	HUB CAP		1	
13	532121749	WASHER		1	
14	810040600	WASHER		1	
15	873540600	NUT		1	
16	532194746	SHAFT		1	
19	532194729	PLATE		1	
21	532186737	ADAPTER		1	
22	532420537	SUPPORT		1	
26	532415987	KNOB		1	
28	817000612	SCREW		1	
35	532194732	PLATE		1	
45	819183812	WASHER		1	
51	873940800	NUT		1	
53	532188967	WASHER		1	
57	532407465	BRACKET		1	
58	532194747	BOLT		1	
59	532194748	WASHER		1	
60	873971000	NUT		1	
61	532194740	LINK		1	
62	532194741	LINK		1	
63	817000512	SCREW		1	
64	532199849	SPRING RETAINER		1	
66	871020748	BOLT		1	
67	532194737	BUSHING		1	
68	873900700	NUT		1	
69	532199162	WASHER		1	
70	532196197	BRACKET		1	

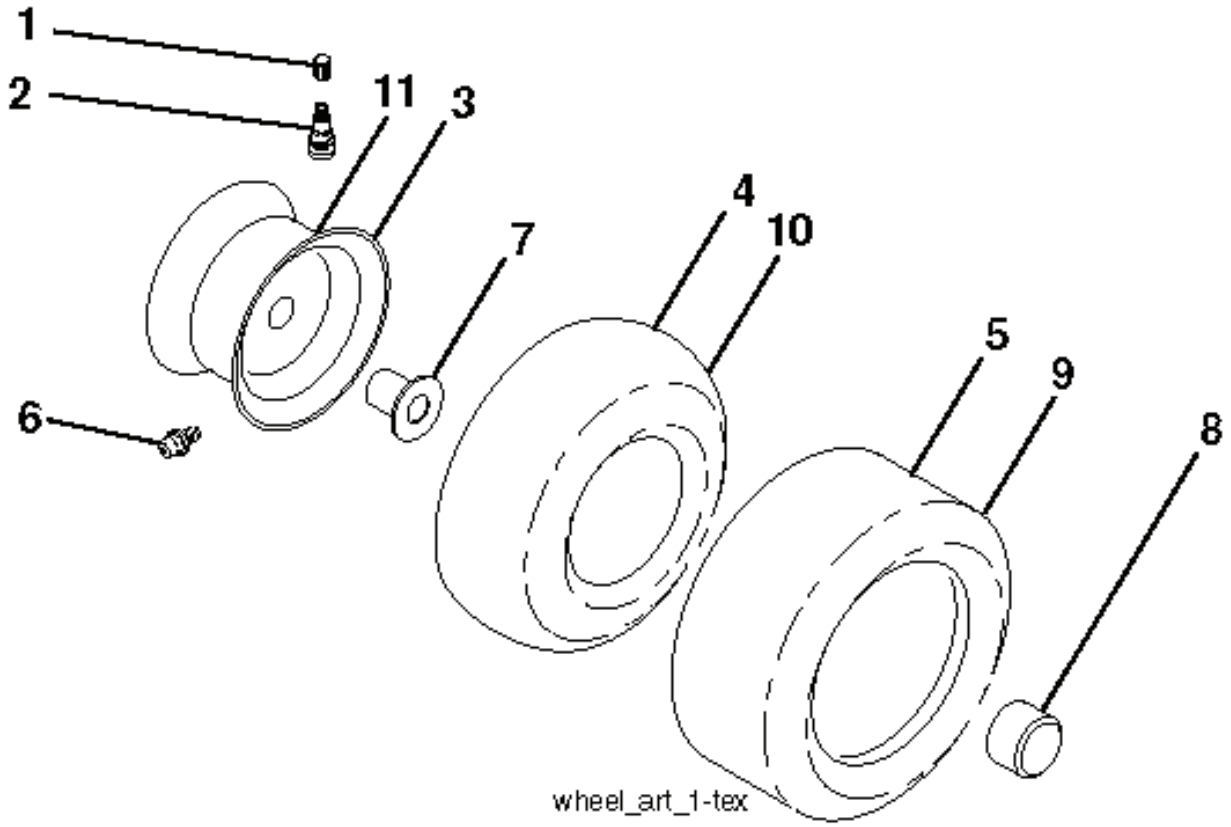
1
2
11
3
4
10
7
5
9
6
8
wheel_art_1-tex

REF.	PART NO.	DESCRIPTION	REMARK	QTY.	KIT
1	532059192	CAP VALVE		1	
2	532065139	NIPPLE		1	
3	532138336	RIM	Front 6"	1	
4	532059904	HOSE	(Service Item Only)	1	
5	532106222	TIRE	Front 15" x 6.0"–6"	1	
6	532124957	FITTING	(Front Wheel Only)	1	
7	532124959	BEARING	(Front Wheel Only)	1	
8	532175039	HUB CAP		1	
9	532122082	TIRE	Rear 30" x 10"–8"	1	
10	532124926	HOSE	(Service Item Only)	1	
11	532138337	RIM SPROCKET	Rear 8"	1	
	532144334	SEALING FOAM		1	

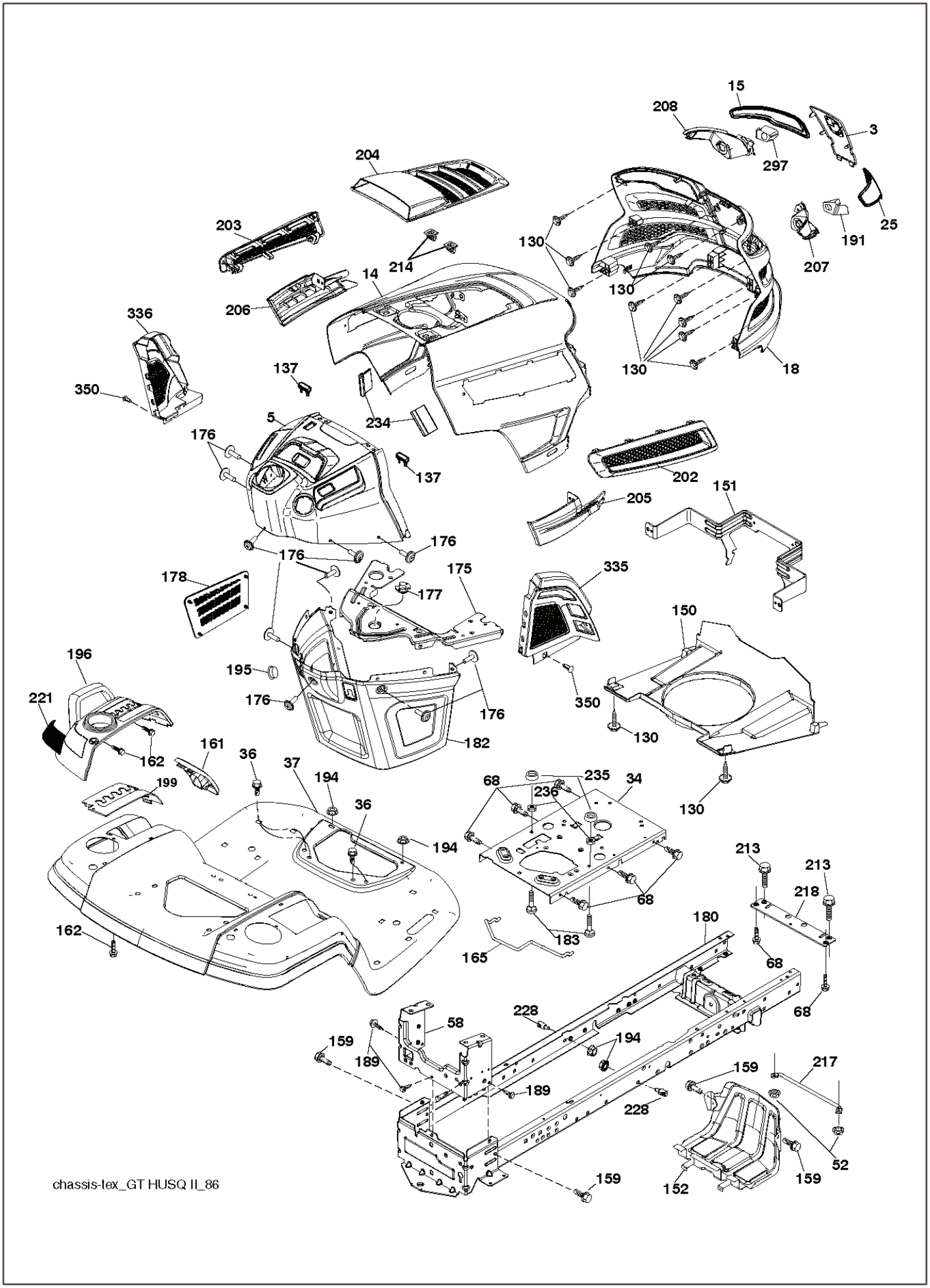

chassis-tex_GT HUSQ II_86

REF.	PART NO.	DESCRIPTION	REMARK	QTY.	KIT
3	532439752	LOGOTYPE		1	
5	532437472	DASH		1	
14	532439725	HOOD		1	
15	532439733	LENS		1	
18	532437762	GRILLE		1	
25	532439732	LENS		1	
34	532196125	PLATE		1	
36	817060512	SCREW		1	
37	532401825	FENDER		1	
52	873680500	NUT		1	
58	532412281	PLATE		1	
68	817490508	SCREW		1	
130	532416358	SCREW		1	
137	532407590	DAMPING PIECE		1	
150	532439774	AIR DUCT		1	
151	532436670	BRACKET		1	
152	532439870	SHIELD		1	
159	817000612	SCREW		1	
161	532401826	CONSOLE		1	
162	532142432	SCREW		1	
165	532196826	BRACKET		1	
175	532196304	SUPPORT		1	
176	532400776	SCREW		1	
177	532195227	BUSHING		1	
178	532199782	NET		1	
180	532415064	FRAME		1	
182	532406859	DASH		1	
183	874520520	BOLT		1	
189	817000512	SCREW		1	
191	532437455	INSERT		1	
194	873900500	NUT		1	
195	532404137	TROU*RPL.PAR 532401556428		1	
196	532400299	CONSOLE		1	
199	532198259	PLATE		1	
202	532439728	COVER	RH	1	
203	532439727	COVER	LH	1	
204	532435714	COVER		1	
205	532439730	SKIRT	RH	1	
206	532439729	SKIRT	LH	1	
207	532439734	CUP	RH	1	
208	532439735	CUP	LH	1	
213	874760512	BOLT		1	
214	532199145	CLIP		1	
217	532409167	ROD		1	
218	532196395	PLATE		1	
221	532198909	LENS		1	
228	532195161	STUD		1	
234	532404742	DAMPING PIECE		1	
235	532406129	SPACER		1	
236	873930500	NUT		1	
297	532437456	INSERT		1	
335	532448204	COVER		1	
336	532439846	COVER		1	
350	532445143	CLIP		1	
--	532431883	BUMPER		1	
	PART NO.		REMARK		KIT