385 EPA, 20064000001-Current

SPARE PARTS LIST

Q Accessories
Zubehöre
Accessories
Accessorios
Tillbehör

***compl** 503 55 85-02

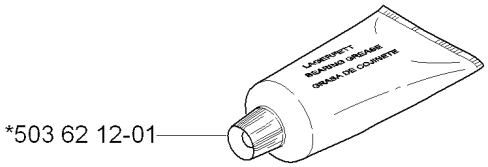

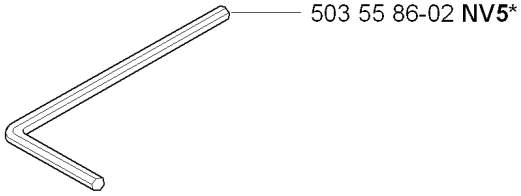

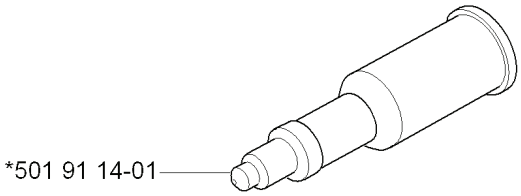

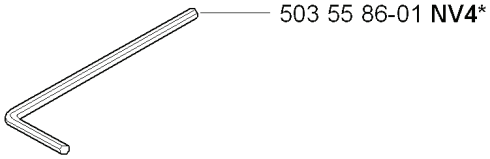

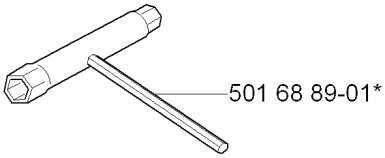

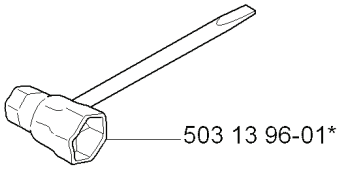

REF.	PART NO.	DESCRIPTION	REMARK	QTY.	KIT
503 55 85-02	503558502	TOOL KIT		1	
503 55 86-02	503558602	SPANNER		1	
503 55 86-01	503558601	SPANNER		1	
503 13 96-01	503139601	COMBINATION WRENCH		1	
501 68 89-01	501688901	COMBINATION WRENCH		1	
501 91 14-01	501911401	GREASE GUN		1	
503 62 12-01	503621201	GREASE		1	

G

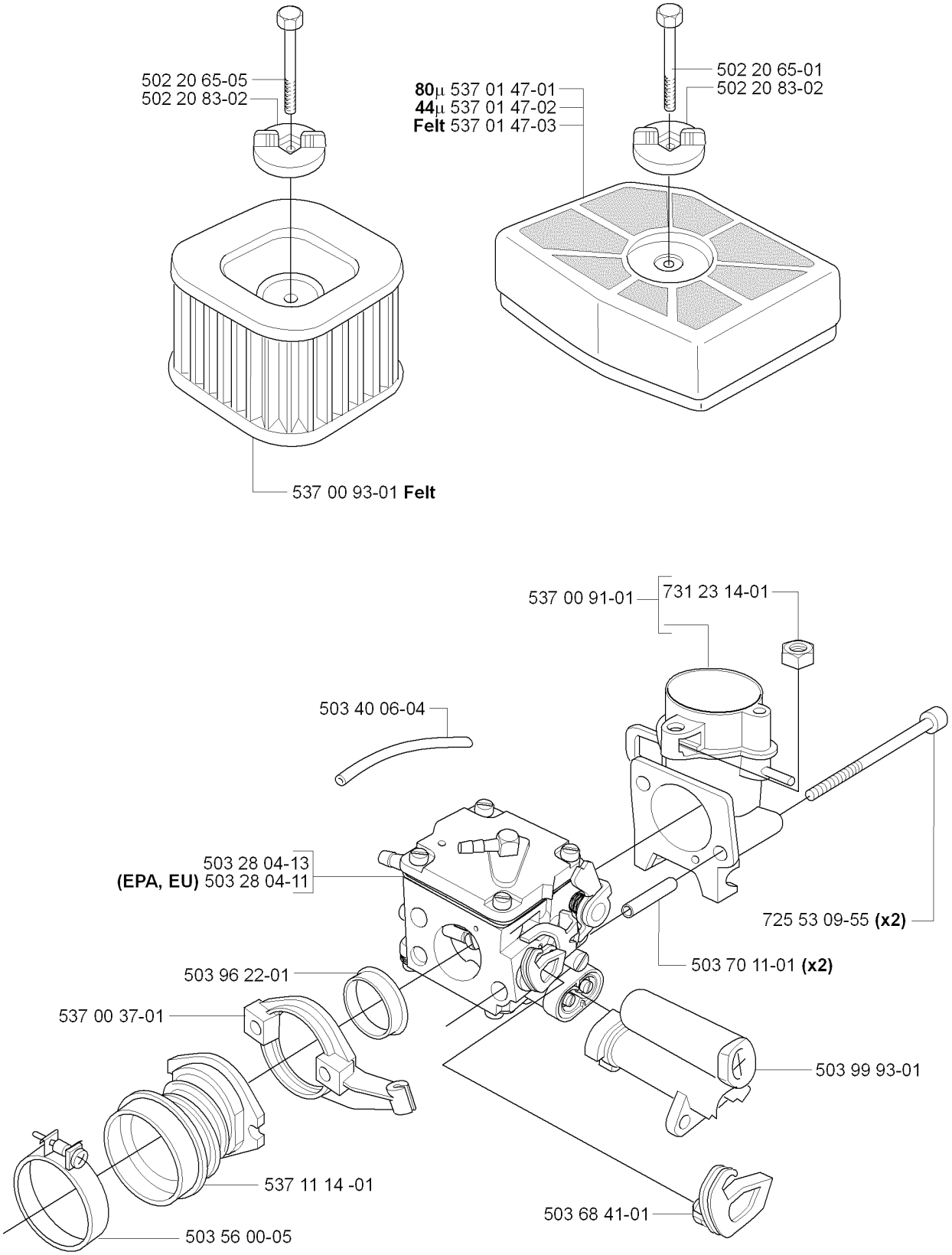
502 20 65-05
502 20 83-02
537 00 93-01 **Felt**
80µ 537 01 47-01
44µ 537 01 47-02
Felt 537 01 47-03
502 20 65-01
502 20 83-02
537 00 91-01
731 23 14-01
503 40 06-04
503 28 04-13
(EPA, EU) 503 28 04-11
725 53 09-55 **(x2)**
503 70 11-01 **(x2)**
503 96 22-01
537 00 37-01
503 99 93-01
537 11 14 -01
503 68 41-01
503 56 00-05

REF.	PART NO.	DESCRIPTION	REMARK	QTY.	KIT
502 20 65-05	502206505	SCREW EHHM		1	
537 00 93-01	537009301	AIR FILTER		1	
503 40 06-04	503400604	IMPULSE HOSE		1	
503 28 04-13	503280413	CARBURETTOR		1	
503 28 04-11	503280411	CARBURETTOR		1	
503 96 22-01	503962201	SUPPORT SLEEVE		1	
537 00 37-01	537003701	FLANGE		1	
537 11 14-01	537111401	INLET PIPE		1	
503 56 00-05	503560005	HOSE CLAMP		1	
503 68 41-01	503684101	LEVER		1	
503 99 93-01	503999301	GUIDE BUSHING		1	
503 70 11-01	503701101	TUBE		2	
725 53 09-55	725530955	SCREW IHSCM		2	
731 23 14-01	731231401	HEXAGON NUT		1	
537 00 91-01	537009101	FILTER HOLDER		1	
537 01 47-03	537014703	AIR FILTER ASSY		1	
537 01 47-02	537014702	AIR FILTER ASSY		1	
537 01 47-01	537014701	AIR FILTER ASSY		1	
502 20 65-01	502206501	SCREW EHHM		1	
502 20 83-02	502208302	KNOB		1	

P **compl** 503 28 04-13
compl 503 28 04-11 **EPA, EU**

Tilotson HS 299A
Tilotson HS 296A EPA

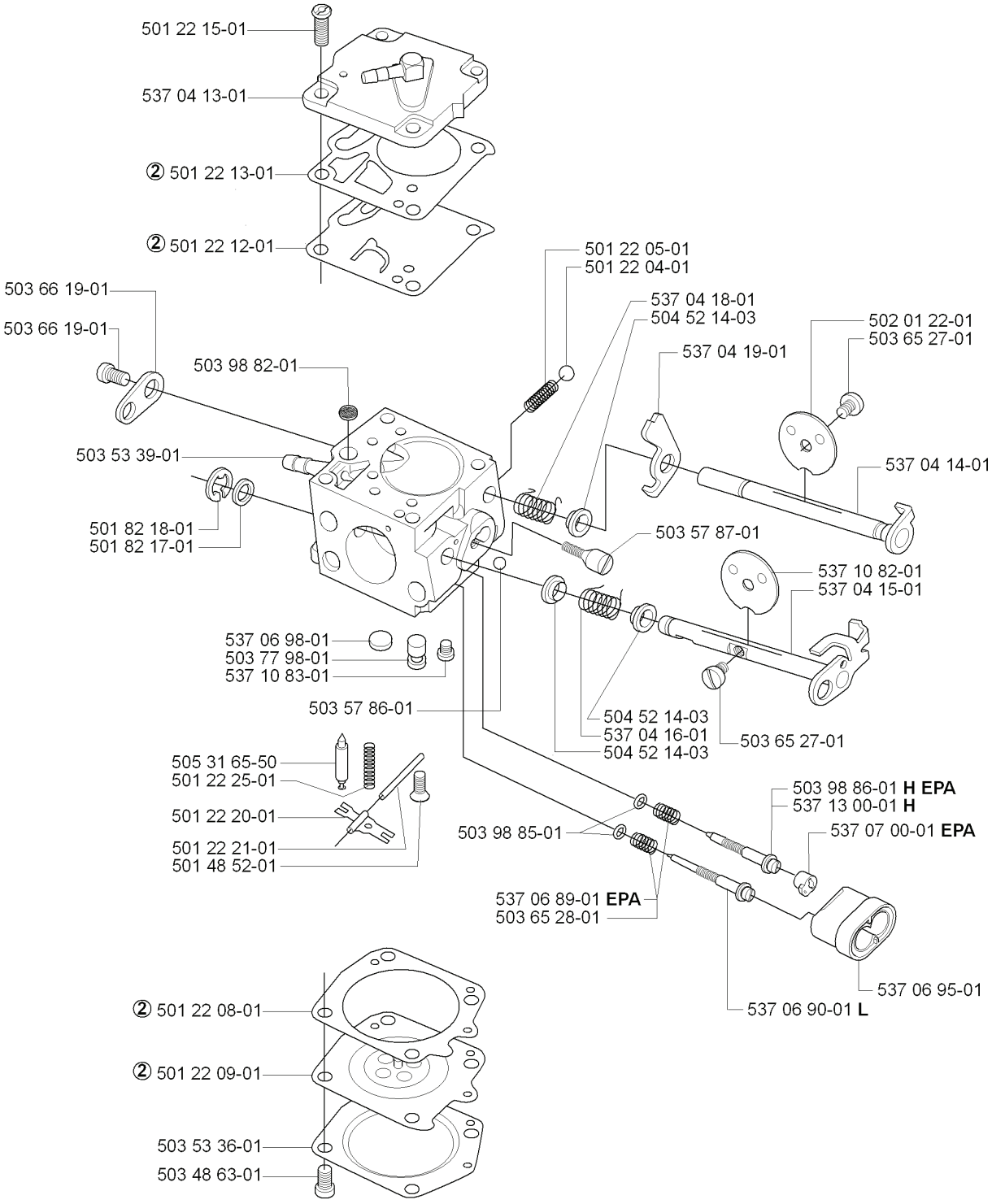

② 501 49 48-02
Packningssats
Set of gaskets
Dichtungssatz
Jeu de joints
Juego de juntas

REF.	PART NO.	DESCRIPTION	REMARK	QTY.	KIT
503 28 04-13	503280413	CARBURETTOR		1	
503 28 04-11	503280411	CARBURETTOR		1	
501 22 15-01	501221501	SCREW		1	
537 04 13-01	537041301	FUEL PUMP COVER		1	
501 22 13-01	501221301	GASKET		1	
501 22 12-01	501221201	DIAGRAM		1	
503 66 19-01	503661901	CHOKE LEVER		1	
503 98 82-01	503988201	SCREEN		1	
503 53 39-01	503533901	TUBE CONNECTOR		1	
501 82 18-01	501821801	THROTTLE SH"E"RING		1	
501 82 17-01	501821701	WASHER		1	
537 06 98-01	537069801	PLUG WELCH		1	
503 77 98-01	503779801	CHECKVALVE ASSY		1	
537 10 83-01	537108301	JET		1	
503 57 86-01	503578601	BALL		1	
505 31 65-50	505316550	NEEDLE		1	
501 22 25-01	501222501	SPRING		1	
501 22 20-01	501222001	LEVER		1	
501 22 21-01	501222101	PIN		1	
501 48 52-01	501485201	SCREW		1	
501 22 08-01	501220801	GASKET		1	
501 22 09-01	501220901	DIAPHRAGM		1	
503 53 36-01	503533601	DIAPHRAGM		1	
503 48 63-01	503486301	SCREW		1	
503 65 28-01	503652801	SPRING		1	
537 06 89-01	537068901	SPRING		1	
503 98 85-01	503988501	RING		1	
537 04 16-01	537041601	SPRING		1	
503 57 87-01	503578701	IDLE SPEED SCREW		1	
537 04 19-01	537041901	LEVER		1	
504 52 14-03	504521403	THRO.RETU.SPR.SLEEVE		1	
537 04 18-01	537041801	SPRING		1	
501 22 04-01	501220401	BALL		1	
501 22 05-01	501220501	SPRING		1	
502 01 22-01	502012201	VALVE		1	
537 04 14-01	537041401	CHOKE LEVER		1	
537 10 82-01	537108201	THROTTLE SHUTTER		1	
537 04 15-01	537041501	SHAFT ASSY		1	
503 65 27-01	503652701	SCREW SHUTTER		1	
503 98 86-01	503988601	NEEDLE		1	
537 13 00-01	537130001	NEEDLE		1	

REF.	PART NO.	DESCRIPTION	REMARK	QTY.	KIT
537 07 00-01	537070001	LIMITER CAP		1	
537 06 90-01	537069001	NEEDLE		1	
537 06 95-01	537069501	MODULE		1	

A

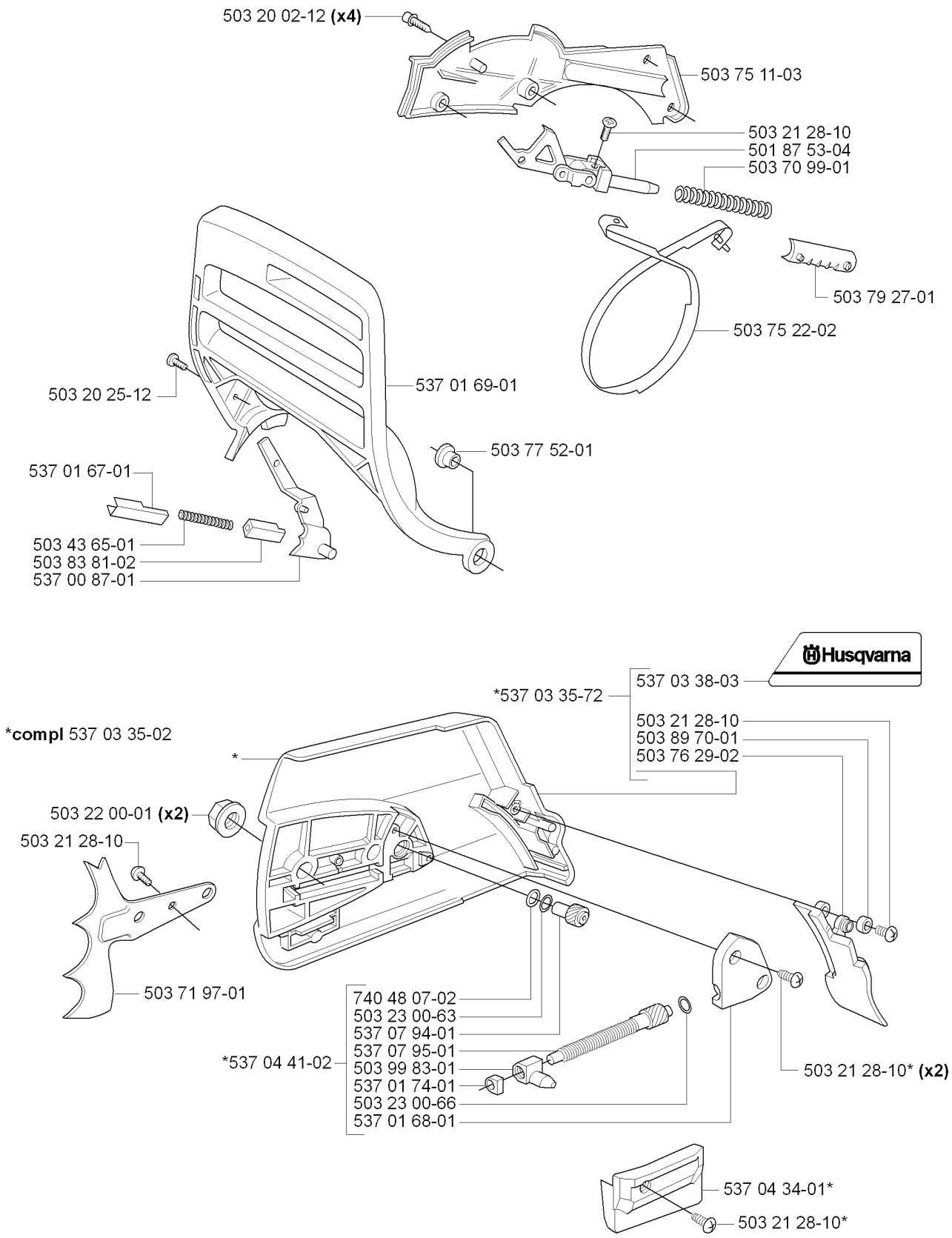
503 20 02-12 (x4)
503 75 11-03
503 21 28-10
501 87 53-04
503 70 99-01
503 79 27-01
503 75 22-02
503 20 25-12
537 01 69-01
503 77 52-01
537 01 67-01
503 43 65-01
503 83 81-02
537 00 87-01
Husqvarna
537 03 38-03
*537 03 35-72
503 21 28-10
503 89 70-01
503 76 29-02
*compl 537 03 35-02
*
503 22 00-01 (x2)
503 21 28-10
503 71 97-01
740 48 07-02
503 23 00-63
537 07 94-01
537 07 95-01
*537 04 41-02
503 99 83-01
537 01 74-01
503 23 00-66
537 01 68-01
503 21 28-10* (x2)
537 04 34-01*
503 21 28-10*

REF.	PART NO.	DESCRIPTION	REMARK	QTY.	KIT
503 20 02-12	503200212	SCREW IHSCFM		4	
503 20 25-12	503202512	SCREW IHSCM		1	
537 01 67-01	537016701	WEAR PROTECTION		1	
503 43 65-01	503436501	POSITION SPRING		1	
503 83 81-02	503838102	LOCK		1	
537 00 87-01	537008701	BRAKE LEVER		1	
537 03 35-02	537033502	CLUTCH COVER ASSY		1	
503 22 00-01	503220001	HEXAGON NUT		2	
503 71 97-01	503719701	SPIKE		1	
537 04 41-02	537044102	CHAIN TENSIONER		1	
537 01 68-01	537016801	COVER		1	
503 23 00-66	503230066	WASHER		1	
537 01 74-01	537017401	BEARING SLEEVE		1	
503 99 83-01	503998301	PAWL		1	
537 07 95-01	537079501	WORM SCREW		1	
537 07 94-01	537079401	WORM WHEEL		1	
503 23 00-63	503230063	WASHER		1	
740 48 07-02	740480702	O-RING		1	
537 03 35-72	537033572	CLUTCH COVER ASSY		1	
503 77 52-01	503775201	BUSHING		1	
537 01 69-01	537016901	HAND GUARD		1	
503 75 11-03	503751103	HUB CAP		1	
501 87 53-04	501875304	KNEE JOINT		1	
503 70 99-01	503709901	BRAKE SPRING		1	
503 79 27-01	503792701	SUPPORT		1	
503 75 22-02	503752202	BRAKE BAND ASSY		1	
537 03 38-03	537033803	LABEL		1	
503 21 28-10	503212810	SCREW CCRPANT		1	
503 89 70-01	503897001	SLEEVE		1	
503 76 29-02	503762902	CHIP GUARD		1	
537 04 34-01	537043401	CHAIN GUIDE		1	

B

compl 537 13 79-71 **(3/8"x7T)
compl 537 13 79-72 **(3/8"x8T)
***compl 537 13 79-02 **(.404"x7T)**

*compl 503 52 13-05

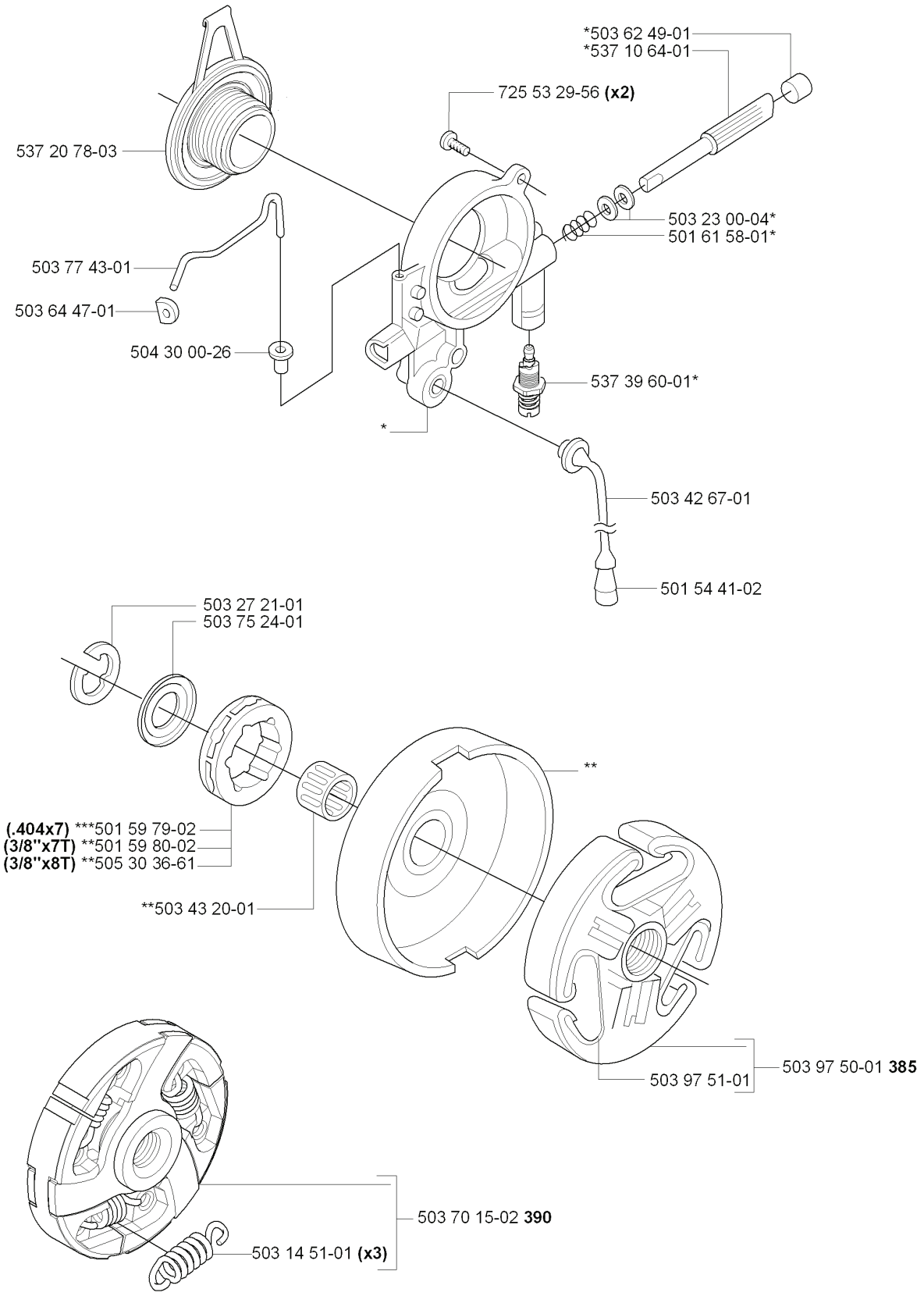

REF.	PART NO.	DESCRIPTION	REMARK	QTY.	KIT
537 13 79-71	537137971	CLUTCH DRUM ASSY		1	
537 13 79-72	537137972	CLUTCH DRUM ASSY		1	
537 13 79-02	537137902	CLUTCH DRUM		1	
537 20 78-03	537207803	PUMP PINION		1	
503 77 43-01	503774301	OIL PIPE		1	
503 64 47-01	503644701	BUSHING		1	
504 30 00-26	504300026	SEALING		1	
503 27 21-01	503272101	E-CLIP		1	
503 75 24-01	503752401	WASHER		1	
501 59 79-02	501597902	RIM		1	
501 59 80-02	501598002	RIM		1	
505 30 36-61	505303661	RIM		1	
503 43 20-01	503432001	NEEDLE HOLDER		1	
503 14 51-01	503145101	CLUTCH SPRING		3	
503 70 15-02	503701502	CLUTCH ASSY		1	
503 97 51-01	503975101	CLUTCH SPRING		1	
503 97 50-01	503975001	CLUTCH ASSY		1	
501 54 41-02	501544102	OIL SCREEN		1	
503 42 67-01	503426701	OIL HOSE		1	
537 39 60-01	537396001	INSERT		1	
501 61 58-01	501615801	SPRING		1	
503 23 00-04	503230004	WASHER		1	
725 53 29-56	725532956	SCREW IHSCM		2	
537 10 64-01	537106401	PUMP PISTON		1	
503 62 49-01	503624901	SEALING PLUG		1	
503 52 13-05	503521305	OIL PUMP ASSY		1	

E

***compl** 503 99 34-04

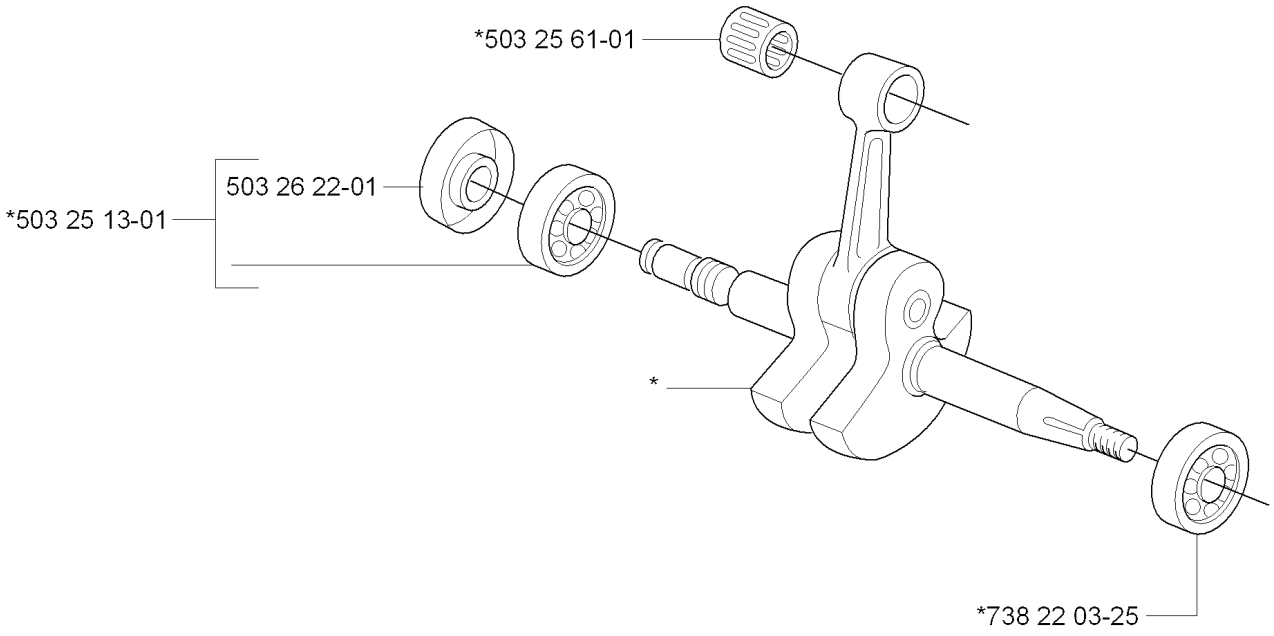

REF.	PART NO.	DESCRIPTION	REMARK	QTY.	KIT
503 99 34-04	503993404	CRANKSHAFT		1	
503 25 61-01	503256101	NEEDLE BEARING		1	
503 26 22-01	503262201	SEALING RING		1	
503 25 13-01	503251301	BALL BEARING		1	
738 22 03-25	738220325	BALL BEARING		1	

C ***compl** 537 00 07-01 **Std**
****compl** 537 00 07-02 **Hd**

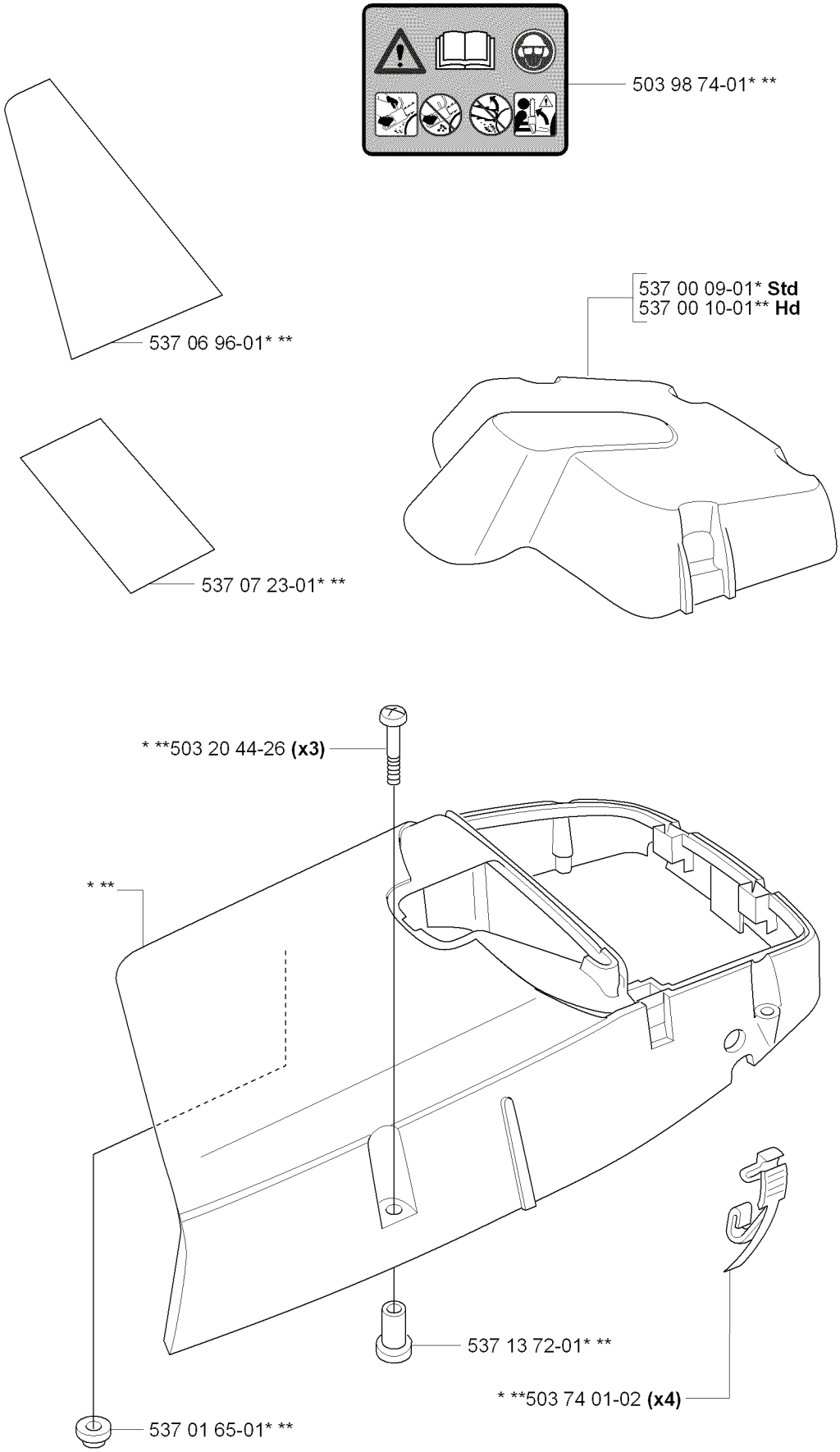

REF.	PART NO.	DESCRIPTION	REMARK	QTY.	KIT
537 00 07-01	537000701	CYLINDER COVER ASSY		1	
537 00 07-02	537000702	CYLINDER COVER ASSY		1	
537 06 96-01	537069601	HEAT PROTECTOR		1	
537 07 23-01	537072301	HEAT PROTECTOR		1	
503 20 44-26	503204426	SCREW		3	
537 01 65-01	537016501	SUPPORT		1	
503 74 01-02	503740102	SNAP LOCKING		4	
537 13 72-01	537137201	SLEEVE		1	
537 00 10-01	537001001	FILTER COVER		1	
537 00 09-01	537000901	FILTER COVER		1	
503 98 74-01	503987401	LABEL		1	

K ***compl** 503 98 66-71
***compl** 503 98 66-72 **(G)**

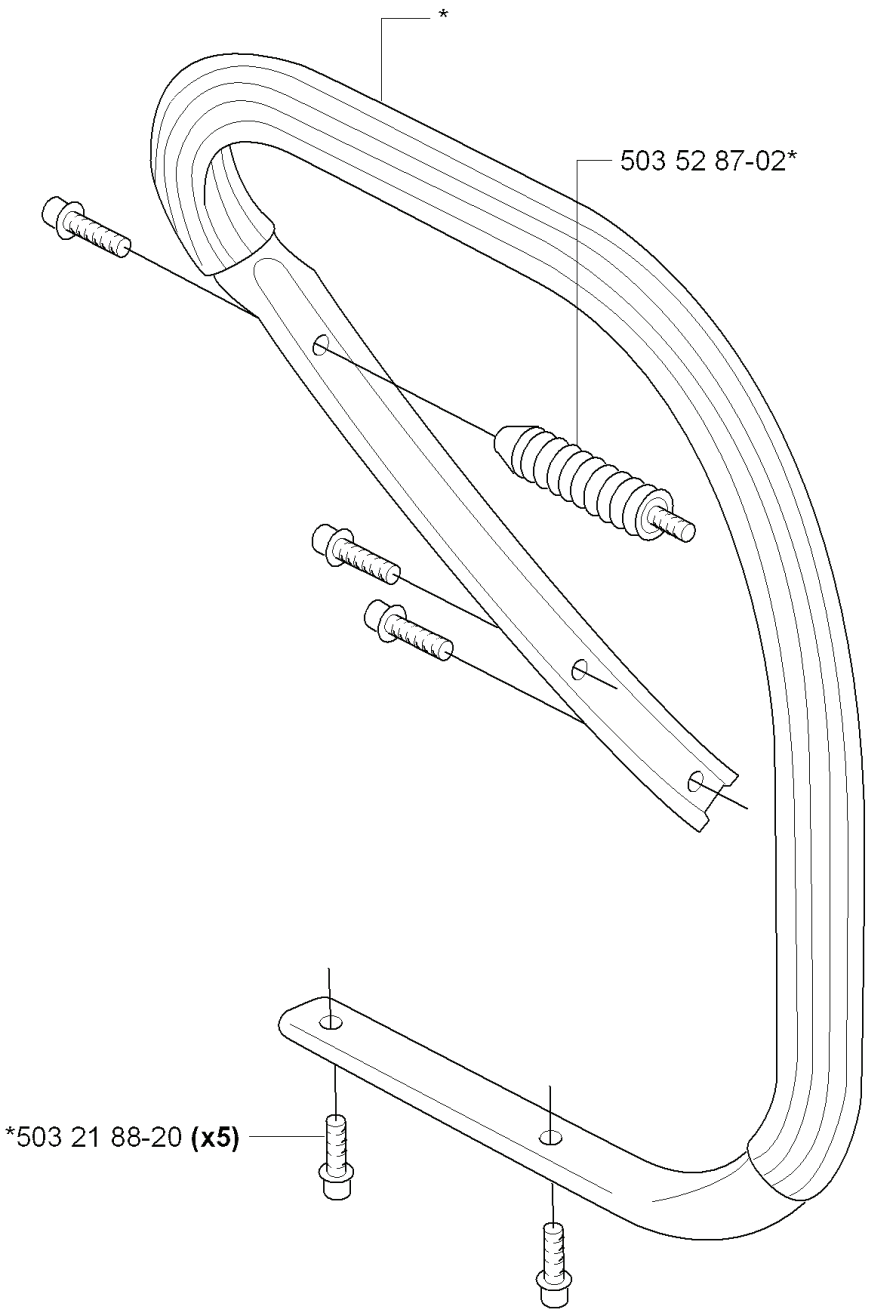

REF.	PART NO.	DESCRIPTION	REMARK	QTY.	KIT
503 98 66-71	503986671	FRONT HANDLE ASSY		1	
503 98 66-72	503986672	FRONT HANDLE ASSY		1	
503 21 88-20	503218820	SCREW IHSCT		5	
503 52 87-02	503528702	INSULATOR		1	

L ***compl** 503 98 67-71 **WA**
***compl** 503 98 67-02 **WA (G)**

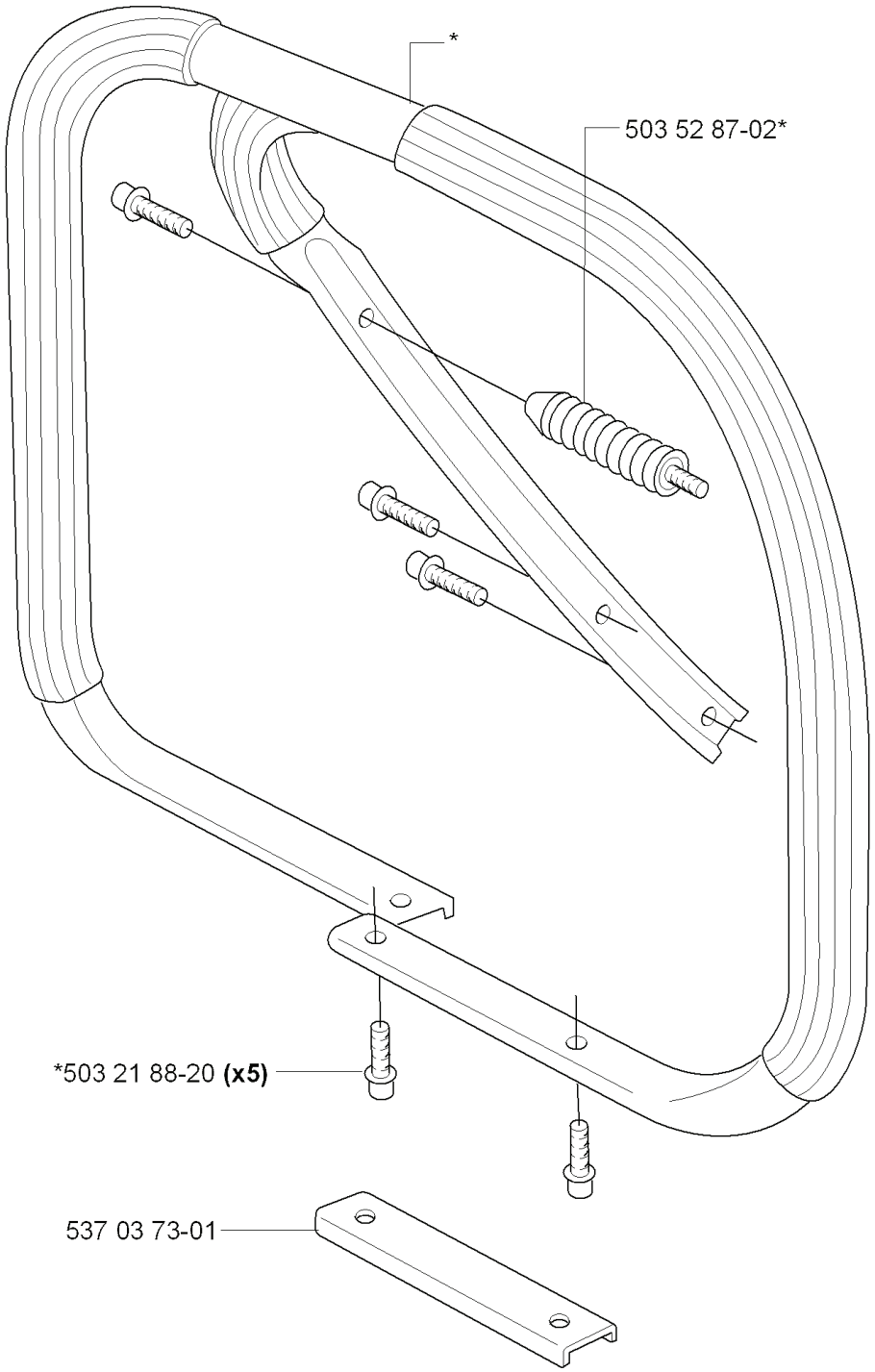

REF.	PART NO.	DESCRIPTION	REMARK	QTY.	KIT
503 98 67-71	503986771	FRONT HANDLE ASSY		1	
503 98 67-02	503986702	FRONT HANDLE ASSY		1	
503 21 88-20	503218820	SCREW IHSCT		5	
537 03 73-01	537037301	REINFORCING PLATE		1	
503 52 87-02	503528702	INSULATOR		1	

M

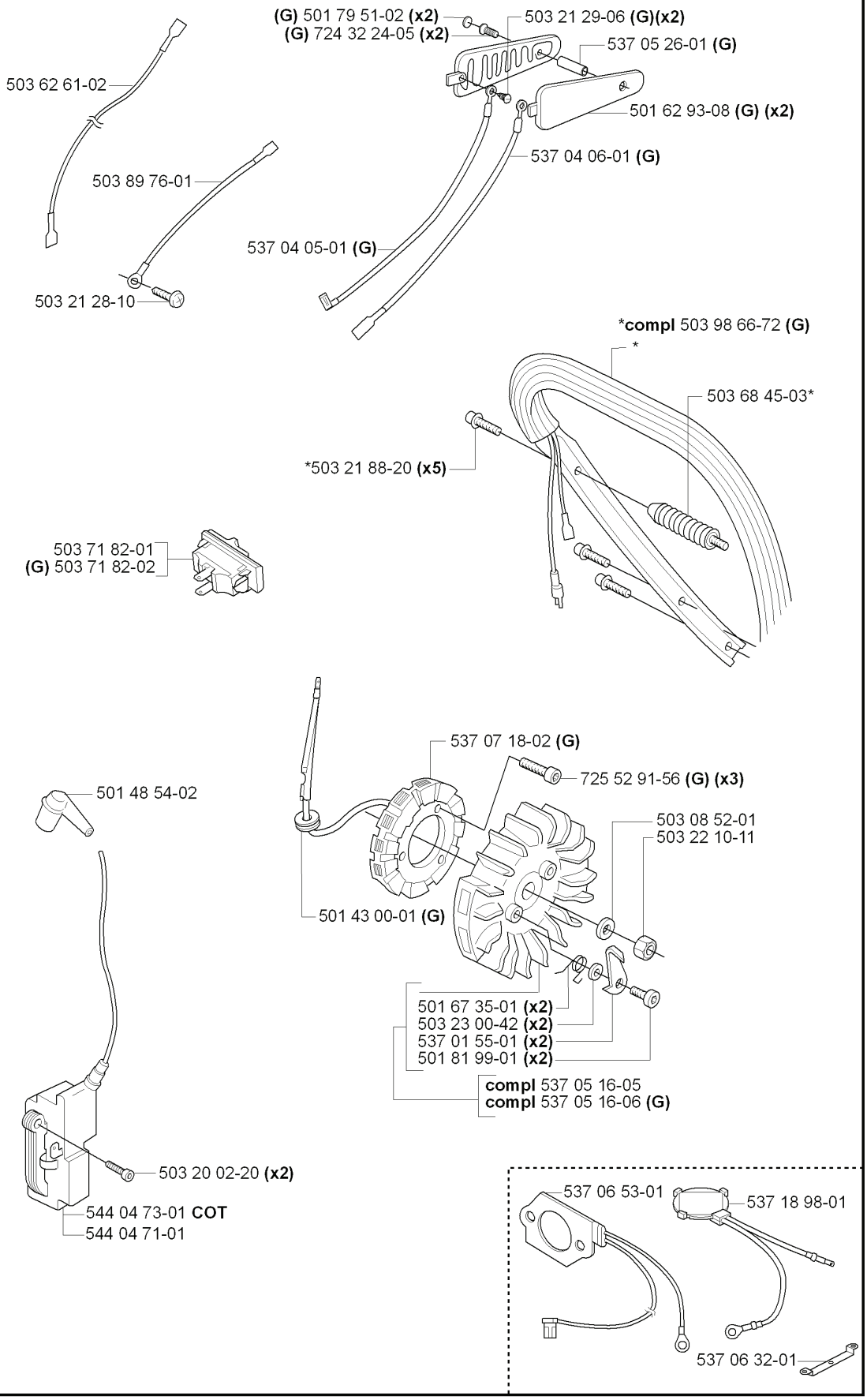
(G) 501 79 51-02 (x2)
(G) 724 32 24-05 (x2)
503 21 29-06 (G)(x2)
537 05 26-01 (G)
503 62 61-02
501 62 93-08 (G) (x2)
537 04 06-01 (G)
503 89 76-01
537 04 05-01 (G)
503 21 28-10
*compl 503 98 66-72 (G)
*
503 68 45-03*
*503 21 88-20 (x5)
503 71 82-01
(G) 503 71 82-02
537 07 18-02 (G)
725 52 91-56 (G) (x3)
501 48 54-02
503 08 52-01
503 22 10-11
501 43 00-01 (G)
501 67 35-01 (x2)
503 23 00-42 (x2)
537 01 55-01 (x2)
501 81 99-01 (x2)
compl 537 05 16-05
compl 537 05 16-06 (G)
503 20 02-20 (x2)
544 04 73-01 COT
544 04 71-01
537 06 53-01
537 18 98-01
537 06 32-01

REF.	PART NO.	DESCRIPTION	REMARK	QTY.	KIT
503 62 61-02	503626102	CABLE		1	
503 89 76-01	503897601	CABLE		1	
503 21 28-10	503212810	SCREW CCRPANT		1	
503 71 82-01	503718201	SWITCH		1	
503 71 82-02	503718202	SWITCH		1	
501 48 54-02	501485402	SPARK PLUG CAP		1	
503 20 02-20	503200220	SCREW IHSCFM		2	
544 04 73-01	544047301	IGNITION MODULE		1	
544 04 71-01	544047101	IGNITION MODULE		1	
537 06 32-01	537063201	RETAINER		1	
537 18 98-01	537189801	THERMOSTAT ASSY		1	
537 06 53-01	537065301	FOIL ELEMENT		1	
537 05 16-06	537051606	FLYWHEEL ASSY		1	
537 05 16-05	537051605	FLYWHEEL ASSY		1	
501 81 99-01	501819901	SCREW		2	
537 01 55-01	537015501	STARTER PAWL		2	
503 23 00-42	503230042	WASHER		2	
501 67 35-01	501673501	SPRING		2	
501 43 00-01	501430001	CABLE GROMMET		1	
503 21 88-20	503218820	SCREW IHSCT		5	
537 04 05-01	537040501	CABLE		1	
724 32 24-05	724322405	SCREW CRCSFM		2	
501 79 51-02	501795102	COVER WASHER		2	
503 21 29-06	503212906	SCREW CCRPANT		2	
537 05 26-01	537052601	SPACER		1	
501 62 93-08	501629308	HANDLE INSERT		2	
537 04 06-01	537040601	CABLE		1	
503 98 66-72	503986672	FRONT HANDLE ASSY		1	
503 68 45-03	503684503	ANTIVIBRATION ELEMENT		1	
537 07 18-02	537071802	STATOR ASSY		1	
725 52 91-56	725529156	SCREW IHSCM		3	
503 08 52-01	503085201	WASHER		1	
503 22 10-11	503221011	HEXAGON NUT		1	

F **compl** 503 95 90-03 **Jungle**
***compl** 503 95 90-04 **DF**

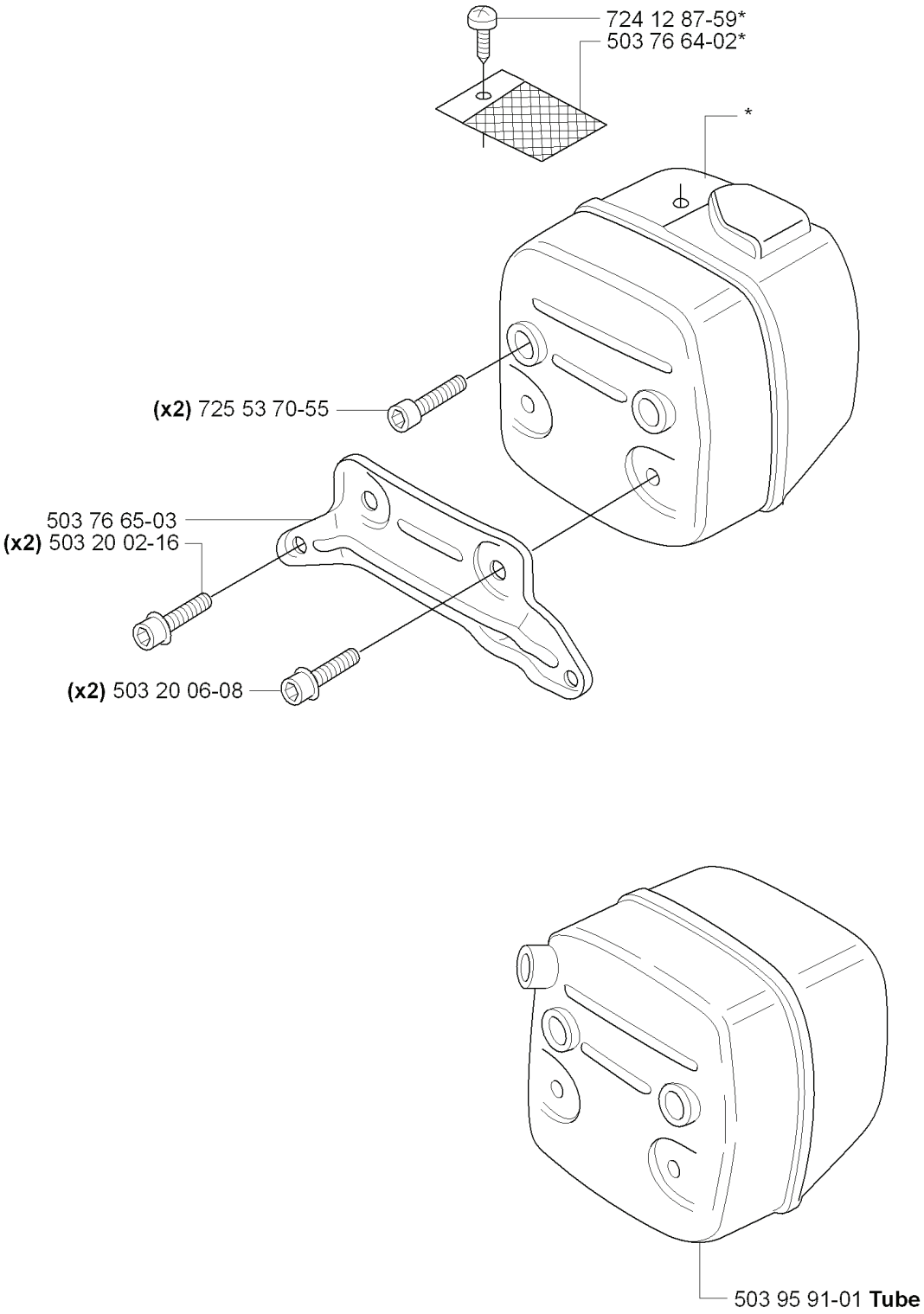

REF.	PART NO.	DESCRIPTION	REMARK	QTY.	KIT
503 95 90-03	503959003	MUFFLER ASSY		1	
503 95 90-04	503959004	MUFFLER ASSY		1	
725 53 70-55	725537055	SCREW IHSCM		2	
503 76 65-03	503766503	BRACKET		1	
503 20 02-16	503200216	SCREW IHSCFM		2	
503 20 06-08	503200608	SCREW IHSCFM		2	
503 95 91-01	503959101	MUFFLER PIPE		1	
503 76 64-02	503766402	SPARK ARRESTER SCREEN		1	
724 12 87-59	724128759	SCREW CRPANM		1	

R **compl** 503 52 13-04

Up to B0500045

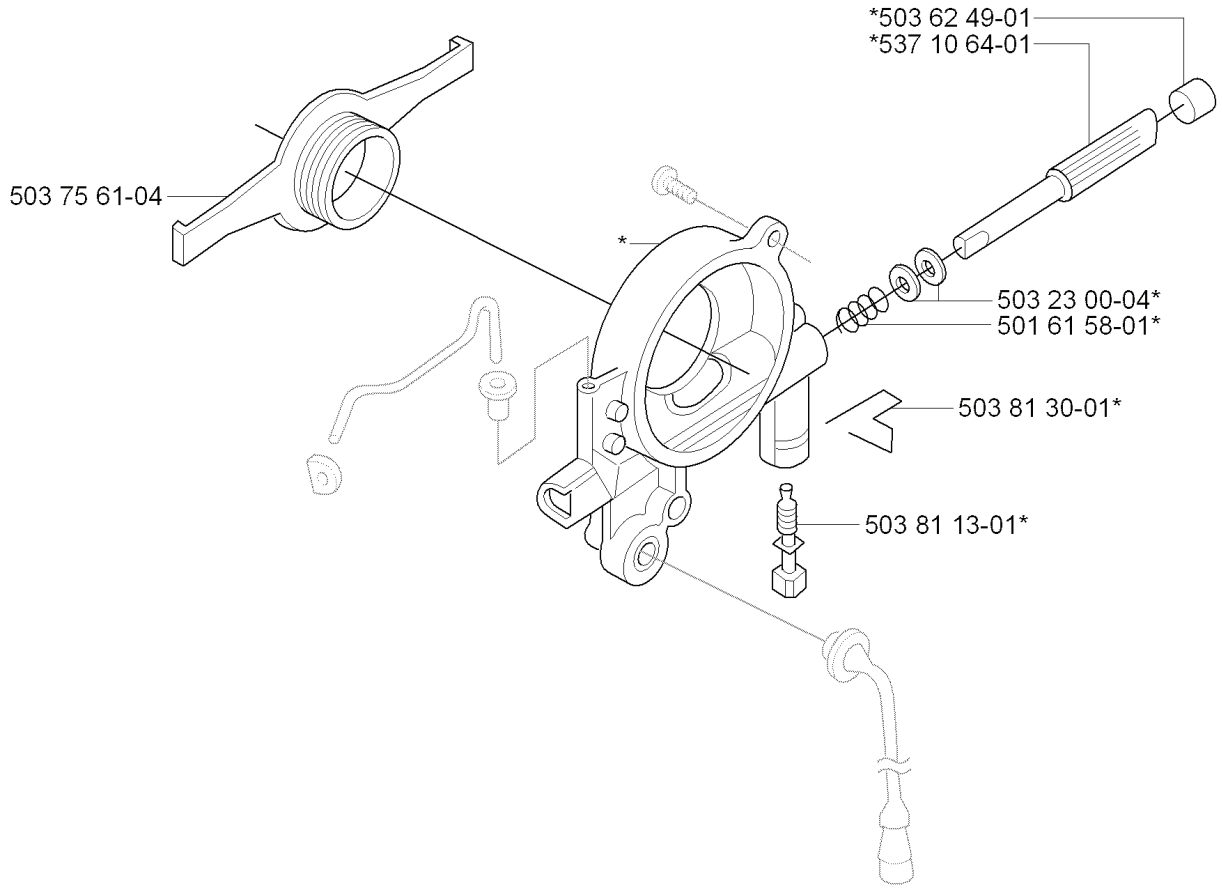

REF.	PART NO.	DESCRIPTION	REMARK	QTY.	KIT
503 52 13-04	503521304	OIL PUMP ASSY		1	
503 75 61-04	503756104	GEAR WHEEL		1	
503 81 13-01	503811301	SCREW		1	
503 81 30-01	503813001	SPRING		1	
501 61 58-01	501615801	SPRING		1	
503 23 00-04	503230004	WASHER		1	
537 10 64-01	537106401	PUMP PISTON		1	
503 62 49-01	503624901	SEALING PLUG		1	

N ***compl** 537 00 38-71

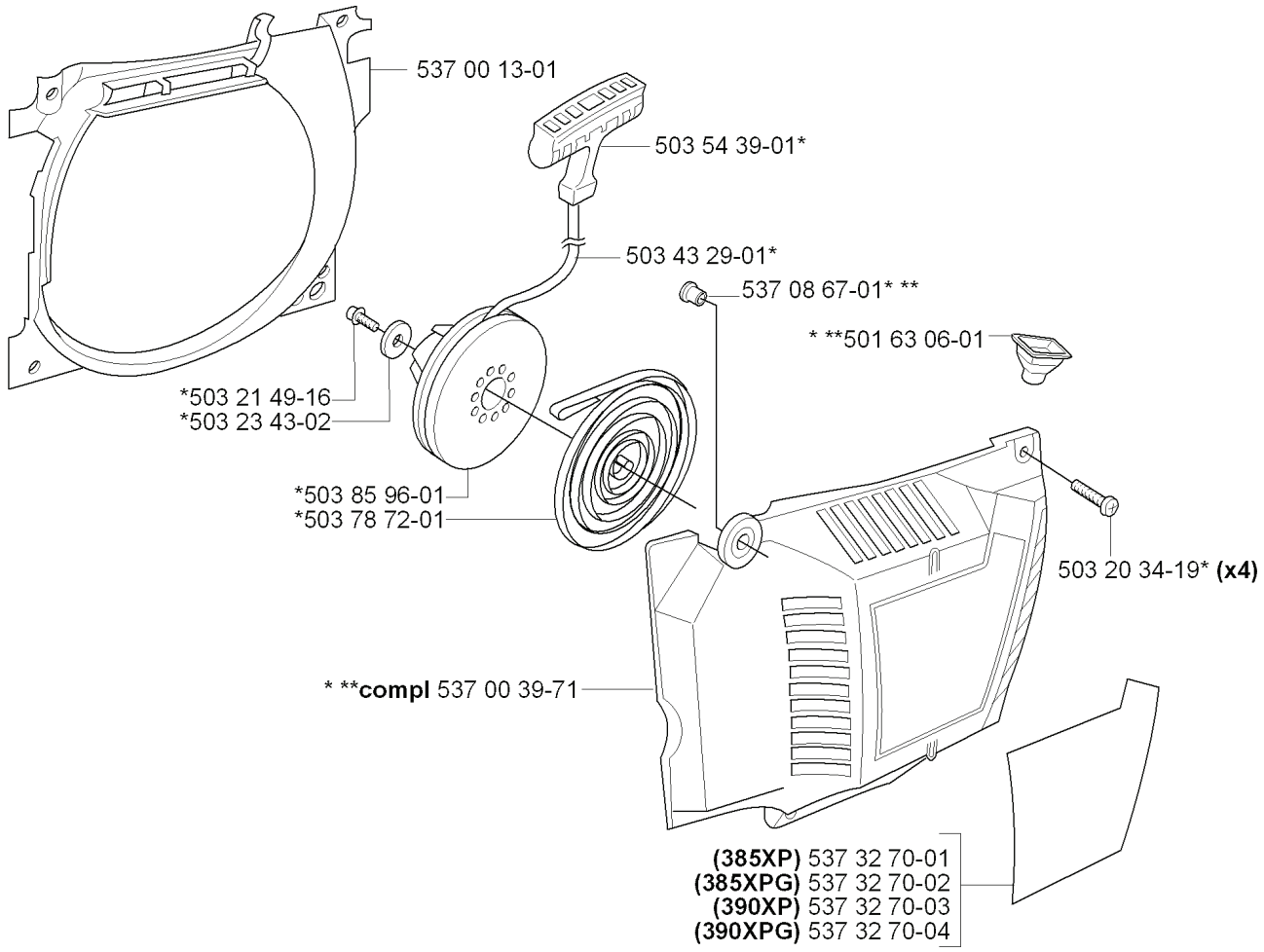

REF.	PART NO.	DESCRIPTION	REMARK	QTY.	KIT
537 00 38-71	537003871	STARTER ASSY		1	
537 00 13-01	537001301	AIR CONDUCTOR		1	
503 21 49-16	503214916	SCREW IHSCFT		1	
503 23 43-02	503234302	WASHER		1	
503 85 96-01	503859601	STARTER PULLEY		1	
503 78 72-01	503787201	RECOIL SPRING		1	
537 00 39-71	537003971	STARTER HOUSING		1	
537 32 70-04	537327004	LABEL		1	
537 32 70-03	537327003	LABEL		1	
537 32 70-02	537327002	LABEL		1	
537 32 70-01	537327001	LABEL		1	
503 20 34-19	503203419	SCREW CCRPANMO		4	
501 63 06-01	501630601	SLEEVE		1	
537 08 67-01	537086701	BUSHING		1	
503 43 29-01	503432901	STARTER ROPE		1	
503 54 39-01	503543901	STARTER HANDLE		1	

A

***compl** 537 33 10-01 **WA**

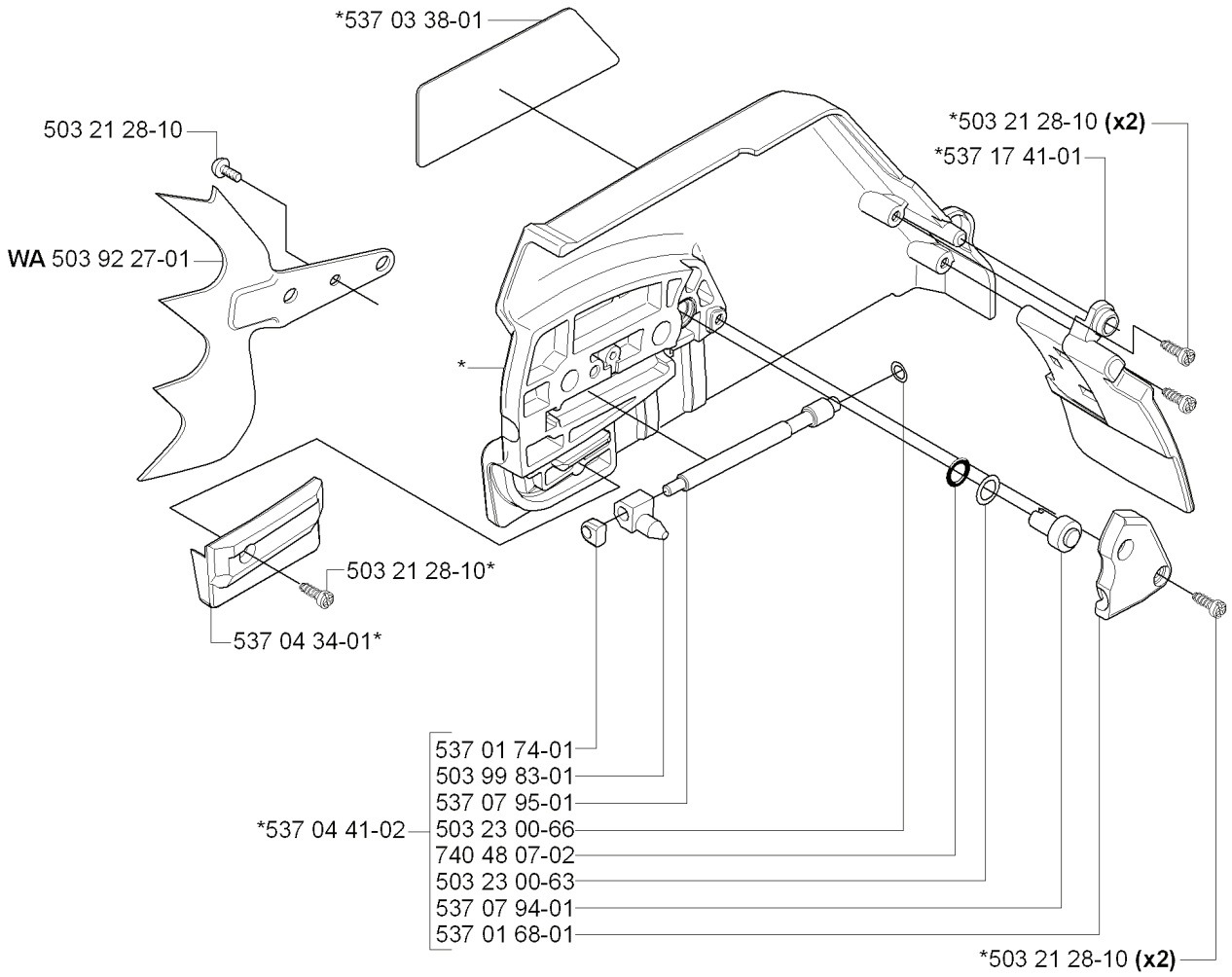

REF.	PART NO.	DESCRIPTION	REMARK	QTY.	KIT
537 33 10-01	537331001	CLUTCH COVER ASSY		1	
503 92 27-01	503922701	SPIKE		1	
537 04 34-01	537043401	CHAIN GUIDE		1	
537 04 41-02	537044102	CHAIN TENSIONER		1	
537 01 68-01	537016801	COVER		1	
537 07 94-01	537079401	WORM WHEEL		1	
503 23 00-63	503230063	WASHER		1	
740 48 07-02	740480702	O-RING		1	
503 23 00-66	503230066	WASHER		1	
537 07 95-01	537079501	WORM SCREW		1	
503 99 83-01	503998301	PAWL		1	
537 01 74-01	537017401	BEARING SLEEVE		1	
537 03 38-01	537033801	LABEL		1	
537 17 41-01	537174101	CHIP GUARD		1	
503 21 28-10	503212810	SCREW CCRPANT		2	

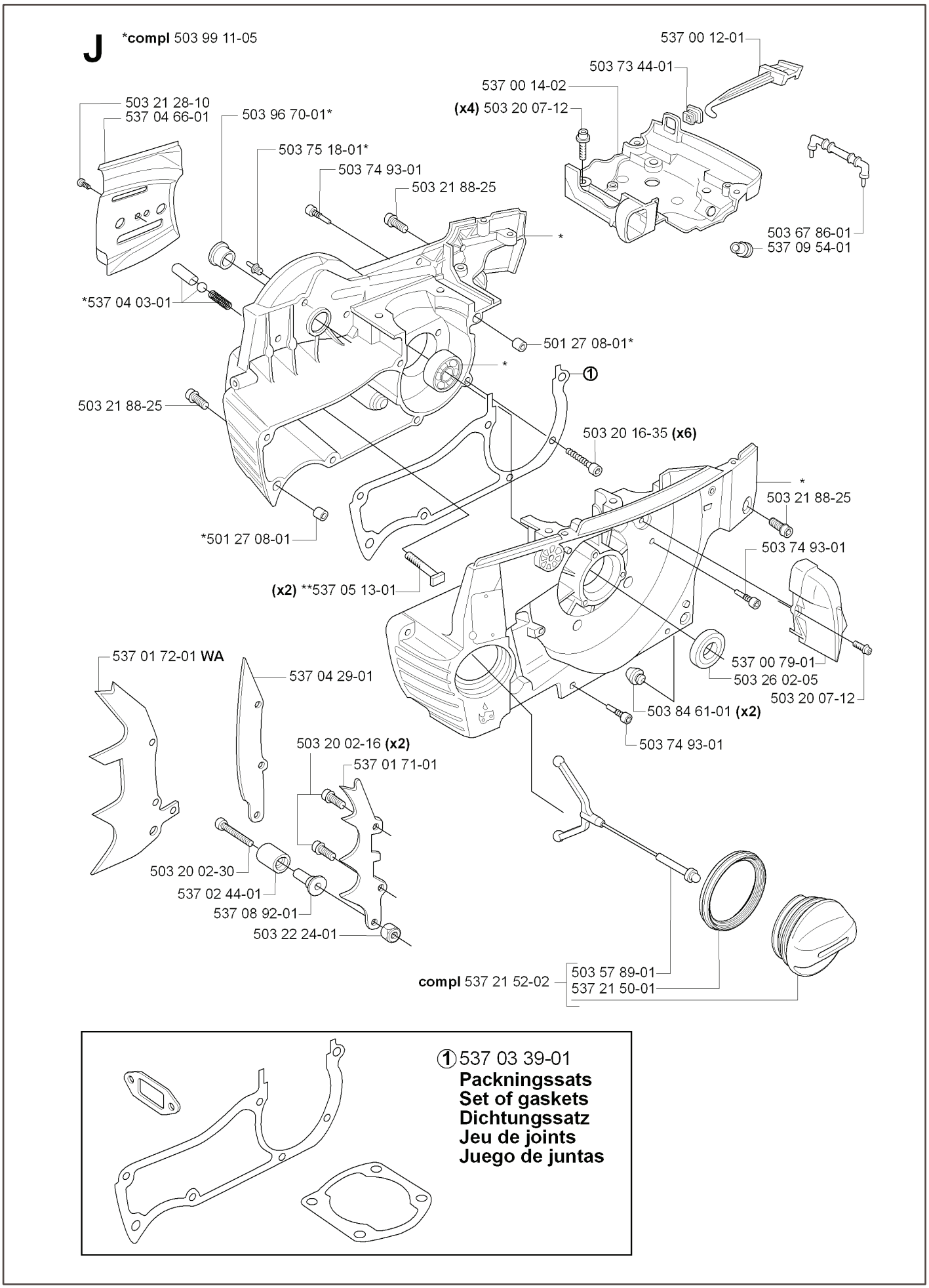
J
*compl 503 99 11-05
537 00 12-01
503 73 44-01
537 00 14-02
(x4) 503 20 07-12
503 21 28-10
537 04 66-01
503 96 70-01*
503 75 18-01*
503 74 93-01
503 21 88-25
*
503 67 86-01
537 09 54-01
*537 04 03-01
501 27 08-01*
*
①
503 21 88-25
503 20 16-35 (x6)
*
503 21 88-25
*501 27 08-01
503 74 93-01
(x2) **537 05 13-01
537 01 72-01 WA
537 04 29-01
537 00 79-01
503 26 02-05
503 20 07-12
503 84 61-01 (x2)
503 74 93-01
503 20 02-16 (x2)
537 01 71-01
503 20 02-30
537 02 44-01
537 08 92-01
503 22 24-01
compl 537 21 52-02
503 57 89-01
537 21 50-01
① 537 03 39-01
Packningssats
Set of gaskets
Dichtungssatz
Jeu de joints
Juego de juntas

REF.	PART NO.	DESCRIPTION	REMARK	QTY.	KIT
503 99 11-05	503991105	CRANKCASE ASSY		1	
503 21 28-10	503212810	SCREW CCRPANT		1	
537 04 66-01	537046601	KIT		1	
537 04 03-01	537040301	VALVE		1	
537 01 72-01	537017201	SPIKE		1	
503 20 02-30	503200230	SCREW IHSCFM		1	
537 02 44-01	537024401	WEAR PROTECTION		1	
537 08 92-01	537089201	CHAIN CATCHER		1	
503 22 24-01	503222401	LOCK NUT		1	
537 21 52-02	537215202	TANK CAP ASSY		1	
537 21 50-01	537215001	SEALING		1	
503 57 89-01	503578901	HOLDER		1	
537 01 71-01	537017101	SPIKE		1	
503 20 02-16	503200216	SCREW IHSCFM		2	
537 04 29-01	537042901	BUMPER		1	
537 05 13-01	537051301	BAR BOLT		2	
503 75 18-01	503751801	PIN		1	
503 96 70-01	503967001	BUSHING		1	
537 00 14-02	537001402	CARBURETTOR		1	
501 27 08-01	501270801	GUIDE BUSHING		1	
503 20 16-35	503201635	SCREW IHSCFM		6	
503 84 61-01	503846101	BUFFER		2	
503 20 07-12	503200712	SCREW IHSCFM		1	
503 26 02-05	503260205	SEALING RING		1	
537 00 79-01	537007901	AIR NOZZLE		1	
503 74 93-01	503749301	SCREW		1	
503 21 88-25	503218825	SCREW IHSCFT		1	
537 09 54-01	537095401	GROMMET		1	
503 67 86-01	503678601	STÖTTA FÖRGASARE		1	
503 73 44-01	503734401	GROMMET		1	
537 00 12-01	537001201	CHOKE CONTROL		1	

D ***compl** 537 16 97-71 **(385)**
***compl** 544 00 65-02 **(390)**

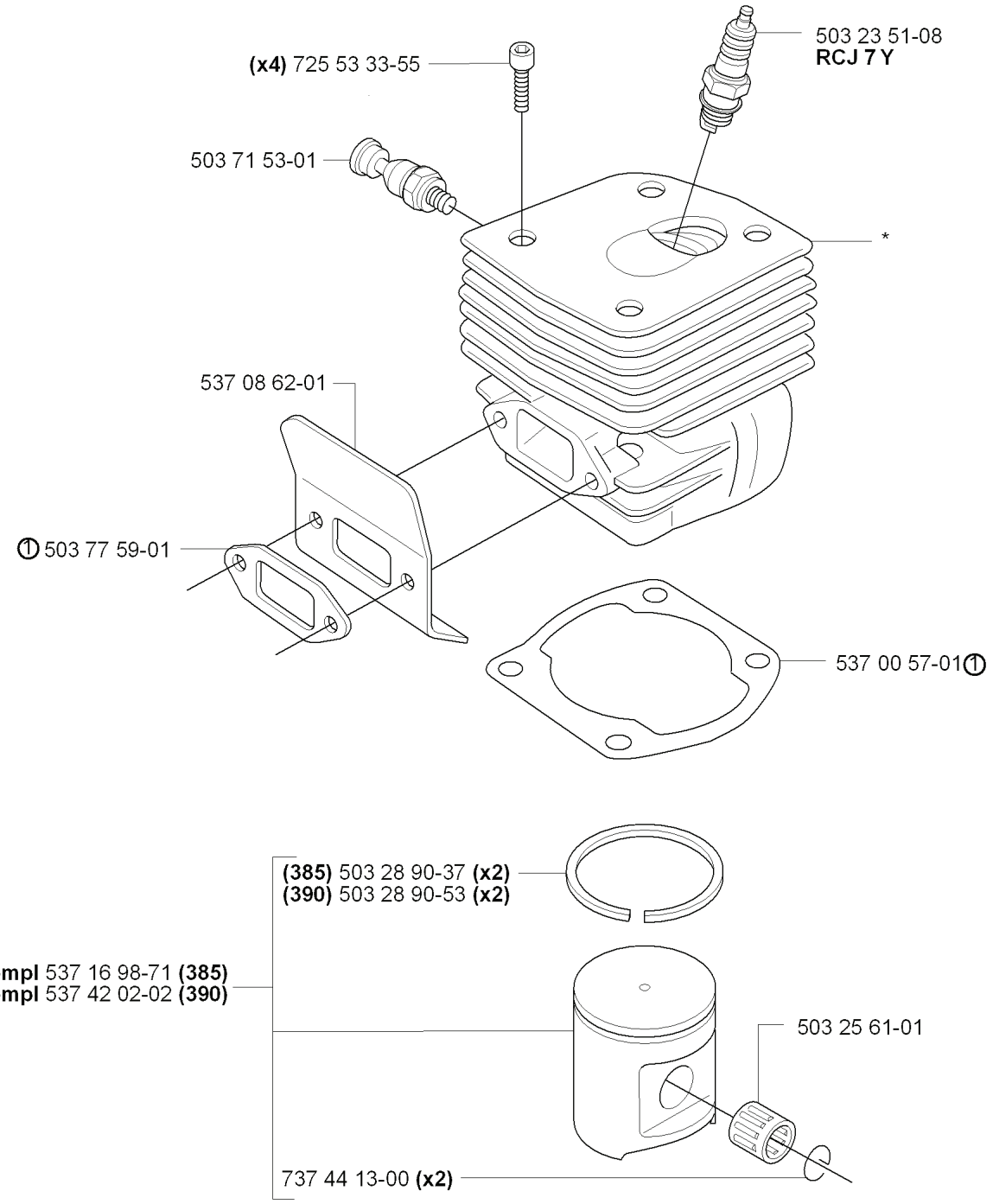

REF.	PART NO.	DESCRIPTION	REMARK	QTY.	KIT
537 16 97-71	537169771	CYLINDER ASSY		1	
544 00 65-02	544006502	CYLINDER ASSY		1	
725 53 33-55	725533355	SCREW IHSCM		4	
503 71 53-01	503715301	DECOMPRESSION VALVE		1	
537 08 62-01	537086201	HEAT DEFLECTOR		1	
503 77 59-01	503775901	GASKET		1	
537 16 98-71	537169871	PISTON ASSY		1	
537 42 02-02	537420202	PISTON ASSY		1	
737 44 13-00	737441300	CIRCLIP		2	
503 28 90-53	503289053	PISTON RING		2	
503 28 90-37	503289037	PISTON RING		2	
503 25 61-01	503256101	NEEDLE BEARING		1	
537 00 57-01	537005701	GASKET		1	
503 23 51-08	503235108	SPARK PLUG		1	

H

***compl** 537 00 03-71

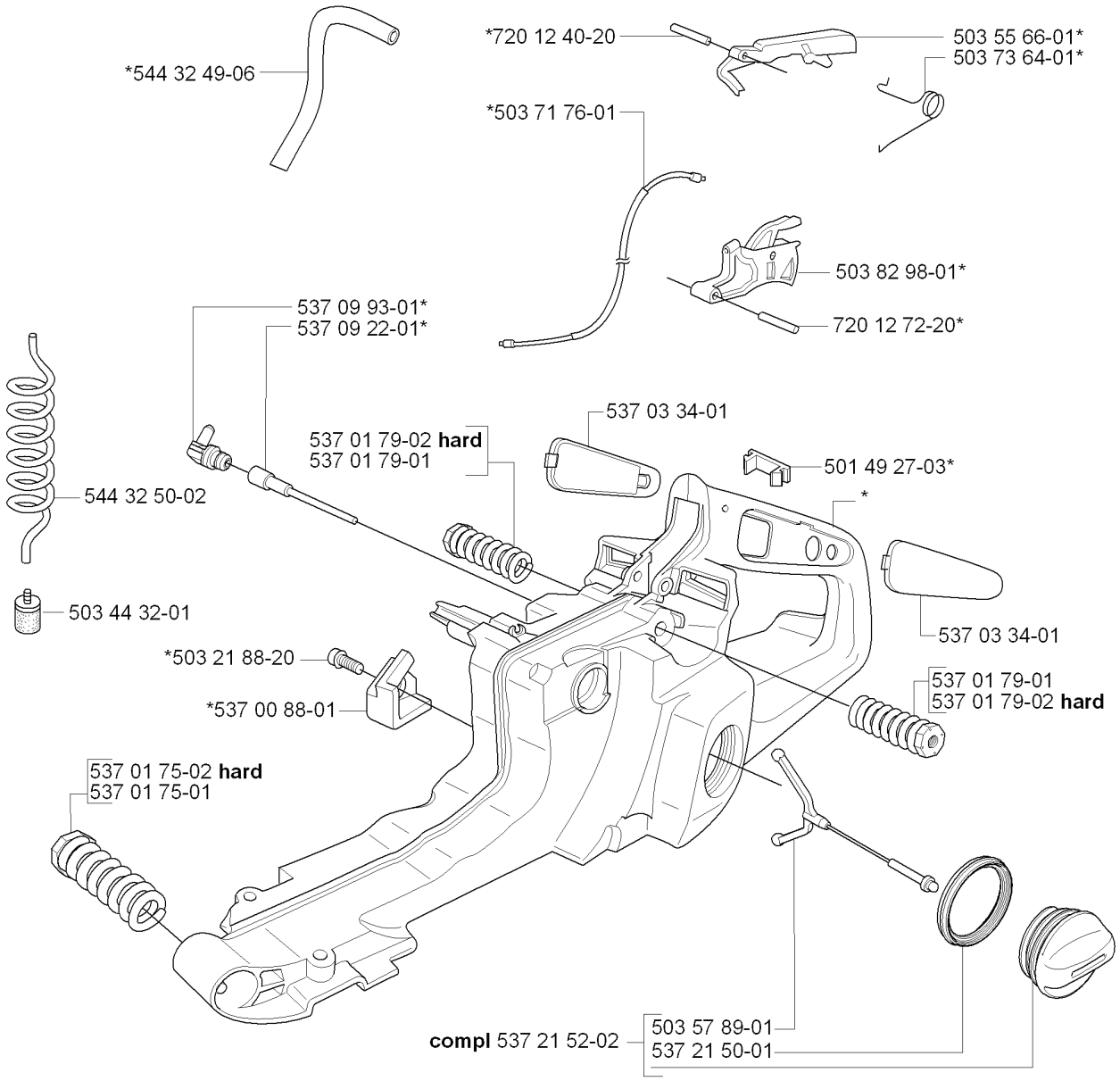

REF.	PART NO.	DESCRIPTION	REMARK	QTY.	KIT
537 00 03-71	537000371	FUEL TANK		1	
544 32 49-06	544324906	FUEL HOSE		1	
544 32 50-02	544325002	FUEL HOSE		1	
503 44 32-01	503443201	FUEL FILTER		1	
503 21 88-20	503218820	SCREW IHSCT		1	
537 00 88-01	537008801	COVER		1	
537 01 75-02	537017502	INSULATOR		1	
537 01 75-01	537017501	INSULATOR		1	
537 21 52-02	537215202	TANK CAP ASSY		1	
537 01 79-02	537017902	INSULATOR		1	
537 09 22-01	537092201	TANK VENT ASSY		1	
537 09 93-01	537099301	CONNECTION BEND		1	
720 12 40-20	720124020	PARALLEL PIN		1	
503 71 76-01	503717601	THROTTLE CABLE ASSY		1	
537 03 34-01	537033401	HANDLE INSERT		1	
503 57 89-01	503578901	HOLDER		1	
537 21 50-01	537215001	SEALING		1	
537 01 79-01	537017901	INSULATOR		1	
501 49 27-03	501492703	COVER		1	
720 12 72-20	720127220	PARALLEL PIN		1	
503 82 98-01	503829801	TRIGGER		1	
503 73 64-01	503736401	SPRING		1	
503 55 66-01	503556601	THROTTLE LOCKOUT		1	

Q **WINTER KIT**
compl 537 04 38-01

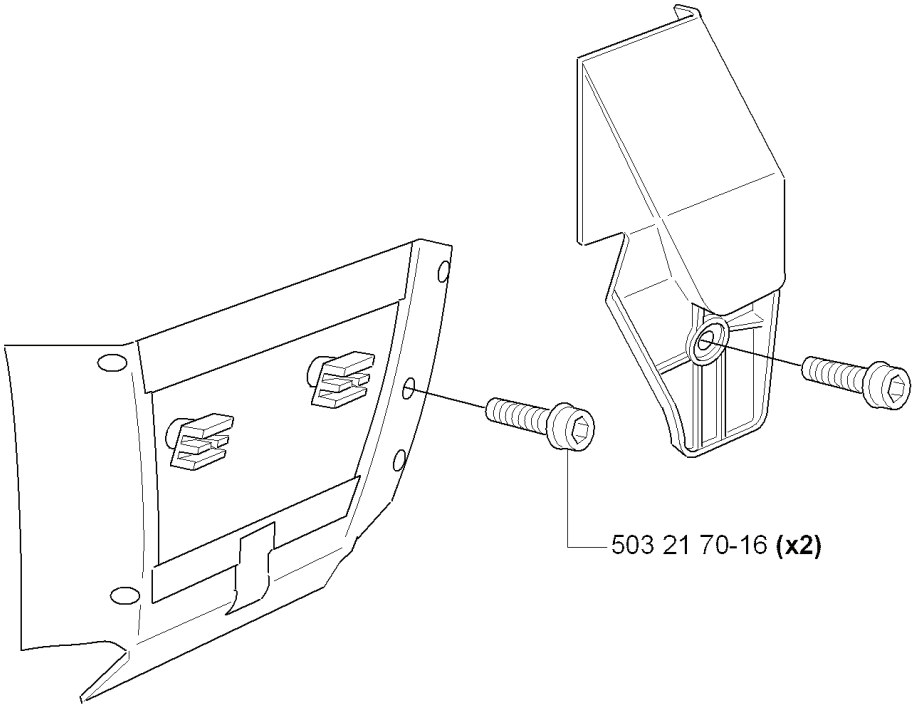

REF.	PART NO.	DESCRIPTION	REMARK	QTY.	KIT
537 04 38-01	537043801	WINTER KIT		1	
503 21 70-16	503217016	SCREW CCRPANT		2	